amateur radio

NOVEMBER, 1974

Despite a lot of talk recently that the component industry in Australia is finished, at least one factory in Melbourne is in full production of capacitors. This particular machine is winding metalised paper capacitors for the telephone industry. **Photo: VK3ACA**

CONTENTS

TECHNICAL —

A Sheet Metal Bender 6
Commercial Kinks 19
Newcomers Notebook 20
SSTV Scene — 1974 7
Telecommand and Telemetry of the Oscar 6 and 7 Communication Satellites — Part 3 10
Try This 19
What To Do With That Old Receiver 18

DEPARTMENTS —

Awards Column 25
Contests — 1974 RD Contest Results 22
Hamads 26
Intruder Watch 21
Letters to the Editor 20
Magazine Index 21
New Products 21
Project Australis 23
QSP — Licence Fees 3
QSP 5 & 17
Silent Keys 26
VHF-UHF — An expanding world 24
20 Years Ago 26

GENERAL —

The 'Pasatest' Communicating Calculator 11
The Wagga Floods — and the Amateur Radio Communications Network: September 1974 12
What Are We Doing To Ourselves 17

SPECIAL INSERTS —

Oscar 6 Standard Orbits
Call Sign Amendments
VK2 WICEN and Broadcast Zones

JOURNAL OF THE WIRELESS INSTITUTE OF AUSTRALIA

GRID DIP METER — Model TE-15

SPECIFICATION

Freq. Range: 440kHz-280MHz in 6 Coils
A Coil 0.44—1.3MHz
B Coil 1.3—4.3MHz
C Coil 4.14MHz
D Coil 14.40MHz
F Coil 120-280MHz
Transistor: 3 TR's & 1 Diode
Meter: 500uA Fs.
Battery: 9V (BL-006P)
Dimensions: 180x80x40mm
Weight: 730g

Price $36.50
P & P $1.00

DELUXE AUDIO GENERATOR — Model HE-22D

SPECIFICATION — Model TE-22D

Freq. Range: Sin: 20Hz-200kHz
Square: 20Hz-25kHz
Output Voltage: Sine: 7 volt.
Square 7 volt
Output Impedance: 1000 ohm
Freq. Accuracy +3% + 2Hz
Distortion: Les than 2%
Tube Complement: 6BM8 12 AT7, 6Z4
Power Source: 105-125, 220-240V AC, 50/60 cps. 19W
With Attenuation Range 4 Ranges—1/1, 1/10, 1/100, 1/1K

Compact-Space Saving.
Printed Circuit for uniform Characteristics.
Low Distortion
Dimensions: 140 x 215 x 170mm
Weight: 2.8kg.

Price $49.50
P & P $2.00

Disposal Specials — Richmond only

Crystals

1 MHz D style	ea. **$8.00**
100 kHz 7 pin glass enclosed	**$10.00**
Most popular D style for 2 m FM channels 1, 4, B, 50 etc.	**$6.50**
58 ohm new ⅛" diameter coax cable 12c/yd or 100 yd	**$10.00**
Tank whip antenna bases, new	**$3.00**
Selsyn motors, 50 volt, new	**$5.00**
PMG phone plug and socket, Ericcson type, per pair	**95c**
Phone curly cords, cream	**30c**
Rocking armature mic. insert	**30c**
Key switches, various types,	**50c & 75c**
4/125a Ceramic valve socket	**$2.00**
7 pin PTFE valve socket with screw-on shield	**98c**
9 pin as above	**98c**
Polypak 100 mixed resistors ⅛W-2W all new	**$1.90**
Polypak 30 assorted capacitors, ceramic, electrolytic polyester, all new	**$1.50**
Switches, 11 position, 2 pole, 2 bank ceramic	**$1.50**
Switches, 4 position, 2 pole	**$1.00**
8 transistor radio cricuit board with all components and battery holder ready to go straight from production line	**$3.00**
6 transistor, as above	**$2.00**

LAFAYETTE HA-600A SOLID STATE

GENERAL COVERAGE

5 BANDS 150-400 kHz, 550-1600 kHz (Broadcast band), 1.6-4.8 MHz, 4.8-14.6 MHz, 10.5-30 MHz.
Operates from 12 Volts DC (negative ground) or 220-240 Volts 50 Hz.

- Field Effect Transistors in RF Mixer and Oscillator Stages.
- Two Mechanical Filters for exceptional selectivity.
- Voltage Regulated with Zener Diodes.
- Product Detector for SSB/CW.
- Edge illuminated Slide Rule Dial with "S" Meter.
- Continuous Electrical Bandspread Calibrated 80-100M Amateur Bands.
- Variable BFO, Automatic Noise Limiter.
- Speaker Impedance: 4 to 16 ohms.

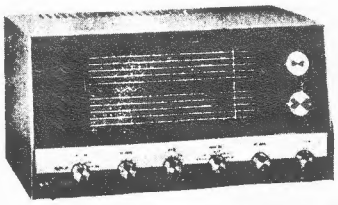

Price $215.00
P & P $2.00

Also available — HA800B Amateur Band. 6 Bands 3.5MHz to 29.7MHz and 50-54MHz as above features with 100kHz calibration **facility: $210.00. 100kHz** Xtal Extra **$10.75.** P & P $2.00

SOLID STATE WIDEBAND RF SIGNAL GENERATOR

MODEL SG-402

This is an all solid state, wideband RF Signal Generator which produces low impedance low distortion RF signals. It is highly dependable and easy to operate, and is a handy working instrument for service benches and electronic equipment production centres.

SPECIAL FEATURES

1. Generates wide range signals from 100kHz to 30MHz in six frequency ranges.
2. All solid state construction for instant waveforms, compact and lightweight portability.
3. Includes 400Hz signal source for modulation of output signal, which can be modulated by external sources.

Price $99.50. p & p $2.00

Disposal Specials — Richmond only

5BPI CRO tubes, new	**$3.00**
Headphones, low impedance, ex-Army in sealed box, pair	**$2.00**
Tag strips, 7 lug plus 2 mounting lugs 10 for	**50c**
Egg insulators, porcelain, new, ea.	**12c**
20 amp DC meter in wooden carrying case	**$10.00**
Telephone hand set with PTT switch, ex-Army	**$1.50**
Coil formers, 1¼" with octal plug, 40 cents each or 3 for	**$1.00**
No. 19 and 62 transceivers, partly wrecked, any reasonable offer accepted.	

Personal shoppers only.

TRIO 3" OSCILLISCOPE DC — 1.5 MHz MODEL CO-1303A

SPECIAL FEATURES

1. Vertical sensitivity of 20 mV/cm, three step attenuation, AC DC operation & wideband frequency response from DC to 1.5MHz.
2. DC vertical and horizontal amplifiers for wide versatility make possible external sweep speeds of less than 1Hz.
3. All solid state construction for compact, lightweight portability.
4. Smoked filter glass CRT face and exclusive designed graticule, graduated in dB for clear waveform comparisons.
5. Direct input to 150MHz for SSB and AM transmission monitoring.

Price $150. p & p $2.00

DISPOSAL SPECIALS

Coax. Cable, 58 ohm Ascand 15 P1/24. Brand new ⅛ outside diameter. 12c per yard. $10 per 100 yard reel.

AWA BEAT FREQUENCY OSCILLATOR from Zero Cycles to 13 kHz, 240 Volt AC $35.

PLESSEY TRANSCEIVERS in stock at present include B47, B48, C42, C45 with power supplies and accessories also available.

Brand new valves and semiconductors

2N3055	$1.00
OA91	15c
807	$2.00
IT4, 6C8, IR5	75c
6BA6-6AK5-6V6G-6J6	$1.00
2E26-QQEO4/7-QQEO4/10	
6SK7-ECH35-6K8G-5763	$3.00
6SJ7GT-12AT7	$1.50

HAM RADIO
(Disposal Branch)

104 Highett Street, Richmond, Vic., 3121 — 42 8136

HAM RADIO SUPPLIERS

323 ELIZABETH STREET, MELBOURNE, VIC., 3000

Phones: 67-7329, 67-4286 All Mail to be addressed to above address

Our Disposals Store at 104 HIGHETT ST., RICHMOND (Phone 42-8136) is open Mondays to Fridays, 10.30 a.m. to 5.0 p.m., and on Saturdays to midday.

amateur radio

JOURNAL OF THE WIRELESS INSTITUTE OF AUSTRALIA, FOUNDED 1910

NOVEMBER, 1974
VOL. 42, No. 11

Price, 70 cents

Registered at the G.P.O. Melbourne for transmission by Post as a Periodical—Category "B"

Editor:
Bill Roper VK3ARZ

Assistant Editor:
Bruce Bathols VK3ASE

Technical Editors:
Bill Rice VK3ABP
Ron Cook VK3AFW

Publications Committee:
John Adcock VK3ACA
Rodney Champness VK3UG
Syd Clark VK3ASC
Ron Fisher VK3OM
Ken Gillespie VK3GK
Neil Osborne VK3YEI
Howard Rider VK3ZJY
Roly Roper —
Gil Sones VK3AUI

Contributing Editors:
Brian Austin VK5CA
Deane Blackman VK3TX
Eric Jamieson VK5LP
Jim Payne VK3AZT

Drafting Assistant
Gordon Row L30187

Business Manager:
Peter B. Dodd VK3CIF

Enquiries and material to:
The Editor,
P.O. Box, 150 Toorak, Vic., 3142.

Copy is required by the **third of each month.** Acknowledgment may not be made unless specially requested. All important items should be sent by certified mail. The Editor reserves the right to edit all material, including Letters to the Editor and Hamads, and reserves the right to refuse acceptance of any material, without specifying any reason.

Advertising:
Advertising material should be sent direct to **P.O. Box 150, Toorak, Vic., 3142,** by the **25th of the second month preceding publication. Phone: 24-8652.**

Hamads should be sent direct to **P.O. Box 150, Toorak, Vic., 3142,** by the **3rd of the month preceding publication.**

Printers:
Chas E. Tully Pty. Ltd.
35 Clifford Street, Huntingdale, 3166.
Phone: 543 1242.

Published monthly as the official journal by the Wireless Institute of Australia.

Reg. Office:
2/517 Toorak Rd., Toorak, Vic. 3142
P.O. Box 150, Toorak, Vic., 3142

QSP

LICENCE FEES

Since the Government doubled licence fees for the Amateur Service in the recent Budget, strong representations have been made by the Executive through both Governmental and Opposition channels.
Letters were immediately written to the Treasurer, Post-Master General, Minister for Defence and Deputy Leader of the Opposition spelling out our objections to the licence fee increase and the hardships and unwarranted imposition which this placed upon all amateurs in Australia.
Replies, as at time of writing, have been received from the Post-Master General, Minister for Defence and the Deputy Leader of the Opposition.

On the Governmental side, the replies have indicated the matter has now been referred to the appropriate authorities for examination. The Deputy Leader of the Opposition, Mr. Phillip Lynch, replied that he had made urgent representations on behalf of the Institute to the appropriate Ministers and had also referred the matter to Senators Guilfoyle and Durack, both of whom have Opposition responsibility in the areas to which we referred.

It is to be hoped that these representations, together with those made by individual amateurs through their local Members will result, at the very least, in restoration of the old $6 licence fee.
The importance of individual amateurs raising this subject with their own Member cannot be stressed too strongly.
Only by each and every amateur raising his or her voice in protest can we hope to impress upon the Government the full significance of this increased cost.

It would be a great shame if even one amateur were forced, through these economic considerations, to abandon a hobby which provides, on the one hand, great enjoyment and a contribution to international understanding and, on the other hand, the potential for providing valuable emergency communications, the need for which can never be forecast.

JOHN McL. BENNETT, VK3ZA
WIA Executive, Public Relations Officer

DIVISIONAL BROADCASTS

Do you have the time and want to keep in touch with events? If so here are the latest details available of Divisional broadcasts.

VK1WI
Sundays 10.00 Z —
3595 kHz
27125 kHz AM
146.5 MHz FM
BC Committee VK1VP, IMP, 2YS/1.

VK2AWI
11.00 local time Sundays:
3595 kHz AM
7146 kHz SSB
52.525 MHz FM
53.866 MHz AM
145.13 MHz AM
Hunter Branch Mondays 19.00h 80m.

VK3WI
10.30 local time Sundays:
1825 kHz AM
3600 kHz SSB
7146 kHz SSB
144.5 MHz AM
Ch1 FM
(subject to availability at present of relay stations whilst under re-location).

VK4WI
09.00 local time Sundays:
3580 kHz AM
7146 kHz SSB
14342 kHz SSB
re-broadcast on Ch B FM. BC officer VK4HB.

VK5WI
23.30Z Sunday mornings originating on 1.8 MHz band and relays as follows—
3.615 MHz by VK5ZQ
7.125 MHz by VK5NB
14.170 MHz by VK5TY
52.2 MHz by VK5ZEG
Ch 48 by VK5WB
VK8CM in Darwin on 2m
VK5DK in Mt. Gambier on 2m

VK6WI
09.30 local time on Sundays:
3600 kHz SSB
7080 kHz SSB
14100 kHz SSB
52.656 MHz FM

VK7
09.30 local time on Sundays originated on Mt. Barrow 2m repeater VK7RAA and re-broadcast in Launceston area 3672 kHz SSB, 7130 kHz AM and in Hobart area on 53.032 AM, 144.1 MHz AM, 146 MHz FM and 432.1 MHz AM.

THERE MUST BE SOMETHING HERE THAT YOU WANT FOR CHRISTMAS

Books — Here's your chance to become a real expert or take up something new as the Christmas season approaches. We have the best selection anywhere because we actively study what's available all over the world. We can therefore confidently recommend the following:

Radio Amateur Callbook (USA) gives an alphabetical directory listing of names and addresses for every radio amateur in the States, Possessions and personnel overseas. Over 283,000 K and W calls are listed. New edition just published has over 600 pages. (P&P $1.00) **$9.95**

Foreign Radio Amateur Callbook (DX Listings) covers over 211,000 radio amateurs outside the USA. Companion volume to above. Latest edition runs to over 400 pages. (P&P $1.00) **$9.95**

Get the two volumes for just $16.00 (P&P $1.00), saving you over $4 on combined purchase.

Radio Amateurs Prefix Map of the World. Specially designed for the shack and must be the centrepiece. Printed in 4 colours. Shows 40 DX zones, plus continental boundaries, time zones, alphabetical listing of prefixes and countries, continents and DX zones. (P&P 50 cents) **Only $1.50**

Radio Amateurs World Atlas. The only one of its kind. Contains 11 maps including all continents (Antarctica etc.). Uses Lambeth Azimuthal equal area projection. Each map shows continental and zone boundaries plus country prefixes. Ideal for field trips and DXers. 4 colours, 20 pages 9 in. by 12 in. approx. (P&P 50 cents) **$3.00**

Radio Amateurs DX Guide. A wealth of information — International DX log, World Map with prefixes. Time tables, etc. 64 pages. (P&P 50 cents) **$3.00**

A Course in Radio Fundamentals — ARRL — 26 chapters for home study. Starts from basic theory, goes right through to feedback, etc. **$3.75**

The ARRL Antenna Book — An accumulation of years of amateur experience. 5 Chapters of theory plus chapters on various designs **$4.25**

Hints and Kinks — ARRL — If you've got a small amount of money and a good junk box, then away you go! Hundreds of clever ideas. **$2.00**

The Radio Amateur's Operating Manual — ARRL — Written for those who must have the finest technique. 9 chapters cover all aspects. **$3.00**

FM and Repeaters for the Radio Amateur — ARRL — A good guide written by amateur experts. Wealth of information plus special jargon section. **$4.75**

SSB for the Radio Amateur — ARRL — A digest of articles from QST tells all about Theory and Practice. **$4.75**

The Radio Amateur's VHF Manual — A thorough treatment including history. Principles, circuits, test gear, etc., with a practical emphasis. **$4.25**

Learning the Radiotelegraph Code — ARRL — Uses the 'Sound' conception method which greatly simplifies code learning. **$1.00**

NEW! The Radio Amateur's Handbook — Latest edition of this widely used book, 25 chapters. Textbook, Data book, Construction Manual. THE reference book. **$6.50**

The World Radio and TV Handbook — The complete directory. 400 pages giving complete and exact info. on every, yes EVERY, transmitting station in the world. SWL's were queuing up for this one when they first arrived. Useful DXers reference book and many sold to professional radio people. (P&P 75 cents) **$5.75**

XYLs/Girlfriends/Wives/Lovers — We know how difficult it is to compete with his hobby, but we haven't neglected you. If the following few books don't appeal to you, they will to him!

US Radio Amateur Callbook and Foreign Radio Callbook are listed elsewhere. You can use them to do his QSLs and you'll have something like half a million names and addresses. Failing that you could correspond with their XYLs?

Radio Amateur's Prefix Map, also listed earlier, makes a good excuse to venture into the shack or even get him to tidy up. It's colourful, 28 in. by 40 in. and only **$1.50.** At least you'll be able to know where the callsigns come from.

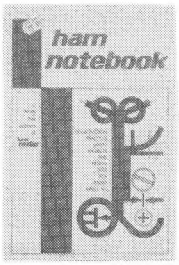

Ham Notebook has rapidly established itself as essential because it is full of handy tips. Learn a few off by heart or read them to him, you'll be amazed at the effect. This book has been compiled from the top US magazine, 10 chapters, 176 pages. When he congratulates you, tell him Dick let you have the book for only **$3.50** instead of the usual $4.50 as a Christmas gift!

One final word, don't tell the OM you read this column, it may upset him.

POWER SUPPLY

suitable for use with 27 MHz transceivers and IC22. Fully regulated 12V @ 3A from 240V main **$32.00**

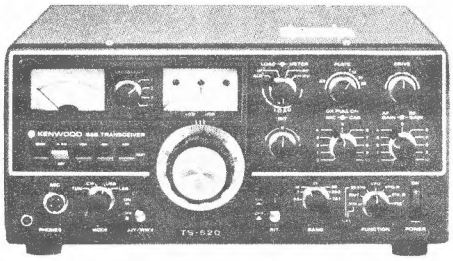

Kenwood TS-520 — 160W, SSB transceiver covers 80 to 10 metres. Features noise blanker, VOX, DX switch, 8 pole crystal filter etc. etc. Has fully transistorised receiver with 0.5uV sensitivity on 80 to 15M. Stability is 100Hz per 30 minutes after warm up. Has one IC, 18FETs, 44 transistors, 84 diodes and a 3 tube line up. Heavy duty die cast construction protects components and ensures lasting stability. Operates on 13.8V dc or 240V ac for mobile and field operation. Too many features to list. Call in to Gore Hill and see one. You'll want one at **$543.00** (Road Freight extra).

VHF EQUIPMENT

Icom IC22 144-148 MHz, FM transceiver has power outputs of 1W and 10W. The 22 channels all have separate trimmers. Deviation 5-15 kHz. Features solid state Tx/Rx relay, large built-in speaker, MOSFET front end with 5 helical filters, noise cancelling mic., quick disconnect mobile mount. And if the spec doesn't grab you, the looks will. Soft green back lighting, special transmit light and and even a light to tell you of incoming signals if the volume is turned down. Supplied complete with workshop manual and accessories right down to a silicone cloth to keep the set like new.

Fitted with one set of crystals for 146.00 or 146.5 MHz (please specify). Normal price is $245 but we are introducing them at only **$189.00,** freight anywhere for only $3.50 including insurance).

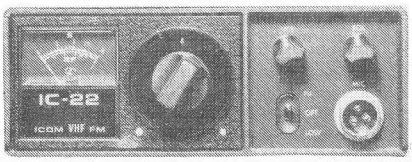

Kits — Knock one of these popular kits up over your holidays. 30 Watt VHF Amplifier intended for 2 Metres but easily adapted to 6M. Only 300mW in gives a full 30W out from a 12.6V supply. Ideal for mobiles. Uses the ultra-robust 2n5589/90/91 (2N5590 stage not needed for 6M)

7 Watt stage 2N5589	**$12.50**	complete
15 Watt stage 2N5590	**$14.50**	complete
30 Watt stage 2N5591	**$18.50**	complete

All three stages together for only **$39.50.** If building 6M version please request instructions.

200MHz Counter Kit (E.A. Dec. 73) fully solid state with 4½ decade readout via 7 segment LED displays. Leading zero suppression. Internal crystal timebase or external calibration as required. Inputs from 50mV to 10V rms into 10M across 50pF. Definitely the best value possible. Basic 20MHz counter **$116.00** or with prescaler for full 200MHz use **$136.00** (P&P $2.00).

Digital voltmeter (E.A. Oct. 73) uses the Analog Devices 3½ digit panelmeter with an accuracy of 0.05% plus or minus 1 digit. Covers 200mV to 2kV and 20 ohm to 200k. Complete kit **$145.00** (P&P $2.00).

Note: Both the instruments are supplied with posh cases and front panels so that their appearance lives up to their performance.

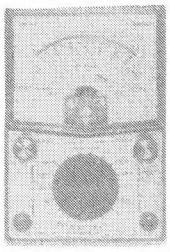

FET Multitester Special — Constant 10Meg input impedance, 27 ranges, battery operated, complete in vinyl case. The famous Jayem L55 in our catalogue last year at **$43.50 slashed by $10** just for the first 100 readers buying before Christmas. Check catalogue for impressive spec, then hurry and save $10. Price is now a low **$33.50.** Special probes to suit but only limited quantities at these prices — RF Probe **$9.50,** Temperature Probe, was $11.00, now **$6.50,** 30kV probe, was $11.00, now **$5.00.** HURRY, HURRY!

Catalogue — Dick's new catalogue was published in October's Electronics Today. If you haven't got a copy send 30 cents towards P&P. Catalogue is the usual small print 64 pages. To print it like the other would require around 4 times as many pages which we couldn't afford, so get a magnifying glass. Three pages for Amateurs alone plus all the useful bumph you need but can never find. 50 cent vouchers, Mail Order form etc., etc. Send now

Dick Smith Electronics
160-162 Pacific Highway
Gore Hill, 2065 439 5311

Also at 361 Hume Highway, Bankstown (100yds from Chapel Road)
Tel 709 6600

Dick please send me a copy of your new 64-page catalogue. I enclose 30c towards post and packing.

Name .....

Address .....

..... Postcode .....

QSP
WARNING!
RAPID PRINTED CIRCUIT BOARD ETCHING

In recent weeks items have appeared in electronics magazines suggesting the use of a mixture of Hydrogen Peroxide and Hydrochloric acid as a rapid etchant for printed circuit boards. Both chemicals are dangerous in themselves but when mixed and a copper board added an exothermic (heat generating) reaction is started which can go into thermal runaway — with explosive results. The results of flying glass and boiling acid on the surroundings (i.e. you) are too horrifying to contemplate.

Even given that the mixture might not explode, chlorine gas may be given off and the results of inhalation of even a small amount are nasty and lasting. (Chlorine was used during W.W.1 as a poison gas).

The amateur would be well advised to stick with Ferric Chloride solution as it is safe (provided you don't splash it in your eyes or try to drink it) and stable. At room temperature with fresh solution a board should etch in about half an hour and if the solution is warmed etch times as short as 5-10 minutes can be achieved. Do not boil though, as nothing is gained and it tends to spit. R. Roper

ALLOCATION OF FREQUENCIES

One of the potentially controversial claims made by the 'Third World' (less developed) countries, supported by China, at the WARC (Maritime) in Geneva a few months ago relates to the joint ownership of the radio frequency spectrum by all countries. It appears that these countries actively dispute the historical development of the international allocation system which gives first users the right of protection against newcomers. How far this philosophy will spill-over into allocations not directly relating to the maritime service cannot of course be predicted with any great precision but if it does the amateur bands might present a tempting target. Certainly the 7 MHz amateur band might well be claimed to belong to those broadcasting stations which have populated it for so long by the time WARC 1979 approaches.

UHF TV

The ABCB has announced channelling arrangements for UHF television as a first step towards the future introduction of some TV services on UHF. The UHF channels extend from Channel 28 (526-543 MHz) to Channel 34 (574-582 MHz) in Band IV and from Channel 39 (614-622 MHz) to Channel 63 (806-814 MHz) in Band V and are stated to supplement the existing 13 VHF channels. The non-continuous numbering system arises from the desirability of arranging for uniformity between Australian channels/frequency allocation and the present overseas practice, it is stated. No UHF transmitting has so far been authorised but the need to do so for new types of TV services might arise in possibly 5 years time. In the shorter term, however, the Board would be authorising UHF transmissions to supplement VHF transmissions for "fill-in" type services. No new services, it is said, will use Channel 5 in the future in accordance with the FM Inquiry recommendations and many existing services on this channel will have to change to an alternative channel to make way for the introduction of FM broadcasting.

CALL-SIGN PREFIXES

The following callsign blocks have been allocated: A9A-A9Z Bahrain; C4A-C4Z Republic of Cyprus; H3A-H3Z Republic of Panama. The Republic of Gambia has become the 147th member country of the ITU. XV5AA, XV5AB and XB5AC have been authorised to exchange radiocommunications with other amateur radio stations outside the Republic of Viet-Nam. Radio Comms. Aug. '74.

RECEIVERS

Pat Hawker G3VA in TT (Rad. Comms. Aug. '74) discusses some of the valid reasons in favour of home-brew HF communications receivers quite apart from any natural sense of achievement that comes from such a project. "Just as teenagers can build a performance car that will outperform Detroits' creations on the drag strip, many an amateur can build a better receiver than he can afford to buy. Yet too many of the designs in amateur journals are imitations of commercial designs and although giving their builders valuable experience too often may result in an inferior receiver at a higher cost".

BOOKS OF INTEREST FOR AMATEUR OPERATORS

Electric Guitar Amplifier Handbook — W. C. Cook **$7.65**
Transistor-TV Servicing Guide — Robert G. Middleton **$4.70**
Transistor Substitution Handbook No. 14 — Sams **$3.25**
TV Servicing Guide — Arranged by Trouble Symptoms — Leslie D. Deane & Calvin C. Young, Jr. **$4.00**
Electronic Organ Servicing Guide — Robert G. Middleton **$5.45**
Radio Handbook, 19th Edition — William I. Orr **$14.95**
Colour Television Theory — Hutson **$11.70**
Single Sideband for the Radio Amateur — A.R.R.L. **$4.85**
PAL Colour Television for Servicemen — W. C. Cook **$15.00**
VHF Handbook for Radio Amateurs — Herbert S. Brier & William I. Orr **$6.60**
99 Ways To Use Your Oscilloscope — Albert C. W. Saunders **$4.95**
Transistor Audio Amplifiers — Jack Darr **$6.05**

ADD POSTAGES: **LOCAL** **45c**
INTERSTATE **75c**

McGILL'S AUTHORISED NEWSAGENCY

Established 1860
"The G.P.O. is opposite"

187-193 ELIZABETH STREET, MELBOURNE, VIC., 3000
Phones 60-1475-6-7

A Sheet Metal Bender

Reprinted from Zero Beat, December 1969

Simple construction and usefulness are combined in this easy to make machine which will bend the softer metals up to 18 gauge and the harder metals up to 24 gauge.

The length of the machine must be determined by the constructor having in mind the largest chassis likely to be required, so plan the size accordingly. The nominal measurements are for 24 inches long overall, giving a bending length of approximately 20 inches.

THE FOUNDATION

The wooden foundation pieces are 1½ inch thick and should be of well seasoned hardwood; the base is 5 inches wide, the hold down 3 inches and the bender 2½ inches wide. Note that the inside edge of the hold down is bevelled to a slope of approximately 80 degrees (the metal edge too) to allow for the natural spring back exerted by metal when bent in length. If the bender is brought tight against the bevel, the metal when relieved of pressure, will spring back to a right angle. The wooden surfaces that come into contact with the metal to be bent are covered with iron, or mild steel, either fully or by 2 inches x ⅛ inch flat, fixed with counter sunk screws set slightly below the surface. If the strip is used rather than the full plate, then build up the surface flush with the metal by using ⅛ inch masonite fixed with glue, nails or counter sunk screws.

The hinges must be robust and free from wobble, so obtain a good pair. A slight clearance must be made in the wood to accommodate the knuckle of the hinge. The hinges may well be fitted before the wooden surfaces are covered, as the two edges must bind as closely as possible to ensure a clean bend. This part is probably the most important so exercise care and accuracy in fitting.

THE HOLD DOWN

This rides freely on two ¼ inch bolts which are a fixture in the base. Hexagon heads, let in, are ideal. The centres are set about 2 inches in from the front edge and from the side. A steel washer under each wing nut will make tightening easier. Slots are required in the hold down for box forming and should be approximately 1½ inch deep. The distances apart are determined by chassis size required and can be put in as required.

Two blades in a hacksaw frame (teeth of each blade opposite to each other) will give sufficient width. The slots are cut into the bevelled edge.

Alternative to cutting slots, a narrow piece of ⅛ inch mild steel could be used, the slots being cut into the wood with a wood saw then the metal cut to length, ends squared and fastened, with a gap, to correspond with the slots in the wood. (Or a number of different length hold downs could be constructed.)

The bender is lowered to a horizontal position and the work allowed to project over the edge of the base as is desired. The material is then clamped with the hold down and the bender pulled up to a vertical position.

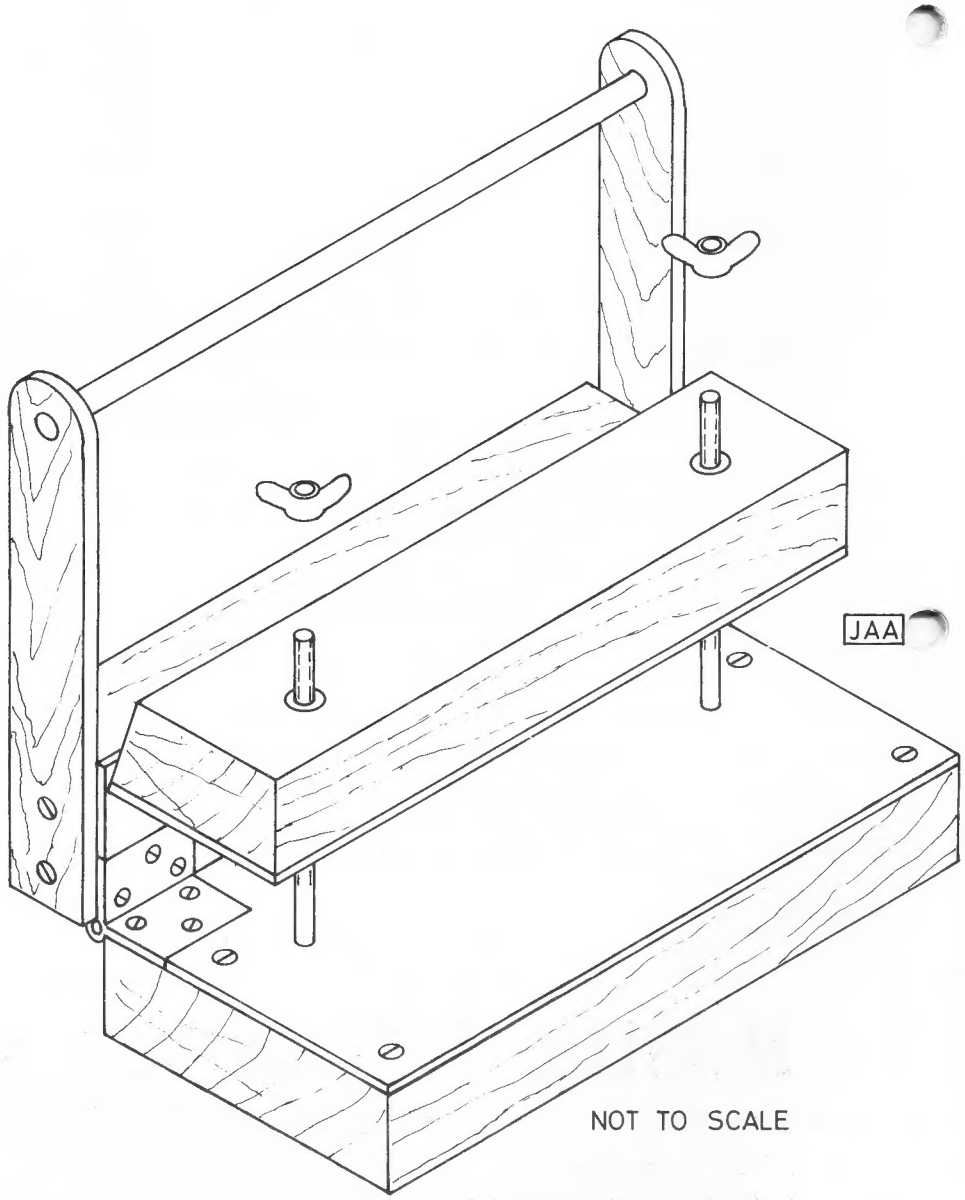

SSTV Scene — 1974

Doug McArthur VK8KK
9 Bulbul Street, Ludmilla, Darwin

Since earlier articles in AR were published, the popularity of SSTV in Australia has been little short of fantastic. The amount of video coming from Australian shacks is on the increase daily. There are, at this time, more than sixty stations with monitors.

To help those interested in venturing into this field, it was thought wise to let all know of the present state of the art in Australia and overseas.

Import duties make the procurement of commercial equipment quite out of the question for most amateurs. Hence most SSTV equipment used in Australia is of the "home brew" variety.

The need to provide help to would-be Slow Scanners was realised by the Eastern and Mountain District Radio Club (EMDRC) SSTV group, and thus the ground was prepared to provide "State of the Art" printed circuit boards and designs around available commonly procurable local components. To date, the group can supply at cost, printed circuit boards for X51 monitor, X52 camera, SSTV master sync pulse generator, Fast Scan to Slow Scan Sampler, and Video Keyboard.

All of these boards will be supplied with circuits and component details. It is emphazised that these boards are the result of a tremendous amount of research culminating in a finished product which, with little effort, is right up to the state of the Art.

MONITORS

The earlier monitors derived their sync and raster from the distant station and thus when sync was not forthcoming the screen remained blank. It was not long before monitors began to appear whose locally generated ramp generators were synchronized to the incoming video.

This gave the added benefit of a continuously painted raster and even when a slight loss of sync did occur, video information would still be presented in a very recognisable form, and in some cases one would not realise that any disturbance had occurred. Sync derivation techniques improved to allow for better signal to interference ratio. The earlier development of toroidal tuned circuits to extract the 1200 Hz sync pulse has given way to the physically compact use of active filters using operational amplifiers. Some circuits go even further and use phased locked loops. However, this idea has not received as much attention as it deserves.

The X51 monitor board will provide the constructor with the major back-bone for a monitor. It is fully solid state using Operational Amplifiers extensively and commonly available components. The only additional components required to complete the monitor are a CRO tube, EHT supply and basic power supply (+ and — 15 volt regulators are already on the board).

The original use of P7 phosphor tubes (5BP7, 5FP7, 7BP7 etc.) was alright, however, the availability of these tubes now is a problem. Also, deflection and focussing coils were an additional problem as these are likewise very hard to obtain.

The SSTV group realising this problem, approached a TV tube re-gun manufacturer for an alternative. The outcome was a major breakthrough for the Australian SSTV exponent. After much testing, an E26 phosphor was developed which could be inserted in any TV glass ware. The finished product is a brand new guaranteed tube with a phosphor which could be viewed in relatively bright lighting (Twin 40W fluorescents) something which was only a dream with the P7 phosphor.

At present we are awaiting further tests on several new phosphors imported from the UK. These have very interesting possibilities and hopefully we may be able to further improve the E26 phosphor, which has a very slight tendency to smear and cause slight loss in picture definition compared with the P7 style of phosphor.

Additionally the bright trace was eliminated from the picture during scan. The picture colour is a reddish orange, but after viewing for a short time one quickly adapts to this colour against the green nature of the P7 phosphor. An 11 inch tube can be supplied "off the shelf" for approximately $26.50 plus packing. Eight inch tubes are now a little hard to come by, due to glassware problems. This is most likely caused by TV stations standardising on larger video monitors. However, if you can obtain a tube of smaller dimensions with an intact envelope, EMDRC will re-phosphor and re-gun this for you. The most common size of picture raster depends upon the viewing distance, but normally a 6 inch square picture is satisfactory, and going above this size will tend to cause degradation in the picture due to the line spacing.

By using the TV picture tubes, standard focusing, deflection and EHT component parts are used. The normal EHT requirement for this phosphor is about 13.5 kV. This is a compromise between brightness and persistance. **A word of warning:** the screen will burn instantly if a spot or a high intensity picture is left on the screen for any length of time. However, the X51 monitor has "spot kill" and line deflection failure circuits inbuilt for tube protection.

After one has completed his monitor and has overcome his excitement of receiving high quality pictures from all over the world, he quickly wants to get amongst it and send his own video. Probably he has approached one of the SSTV operators and has his CQ call, name and QTH on tape to attract attention, but it's not the same as sending what he wishes when he wishes. Now he faces the decision of how

Doug VK8KK with home-built slow scan monitor at lower left, fast scan monitor above, Akai tape recorder, and FTDX490 transceiver.

to tackle the problem. He has the basic choice of three directions:

1. Flying Spot Scanner.
2. X52 type of Camera.
3. Fast to Slow Scan conversion technique.

Taking them one by one.

The Flying Spot Scanner can be broken down into two types. "See through" and "Reflective". The "See through" type places the scanned subject between the raster tube and the photo multiplier and is naturally a transparency. The reflective version places the image to be scanned In front of the raster which is focused upon the image. The reflected light intensity is picked up by two photo multipliers placed in front of the lens.

Out of the two, the reflective system is by far the most flexible, enabling the average amateur to find transmission data from books, etc. or his own pen drawings of the appropriate size.

The other method requires the amateur to dabble in photography and thus limits his capabilities. Both systems give the same picture quality. The electronics behind a Flying Spot Scanner are very simple and basic. They would also be by far the most inexpensive. The metal work, etc. in the construction requires a bit of a workshop and poses the biggest headache.

When building a Flying Spot Scanner, several operators have run into smearing definition problems. This has been due to the phosphor of the raster tube. 3BP7, 3FP7 and the like as generally used for this purpose rely on the fast phosphor (the bright blue trace—not the green afterglow) which allows for a fast rise and fall time used in scanning. However, during their time of manufacture (WW2) the prime objective was to produce the "P7" phosphor i.e. the long persistance, and the "excitation phosphor" was not always of a fast writing type. The author has had experience of having three 3BP7s by the same manufacturer produced within a four month period giving completely different results. Only one tube was satisfactory. If you have a smearing or similar problem, this could be your trouble.

Incidentally, while talking CRO tubes, we in VK are trying to convince overseas manufacturers to change the 1 : 1 picture format, for the standard 4 : 3. Even the foremost manufacturer of SSTV equipment uses a 4 : 3 tube but masks out the remainder of the unused tube. Of course, as previously mentioned, the large majority of VK monitors use TV tubes, and technically there are only advantages to be gained. The only draw-back being those using old CRO tubes which give a smaller overall picture. It will not be long before these surplus P7 tubes will become extinct.

Some amateurs would be quite happy to stop at a Fast Scan Sampler and put up with its draw-back of having to prepare all material which is to be sent beforehand. However, the bug normally bites to own a camera and shoot scenes at random.

Improvement always means added expenditure and increased technical finesse!

Example of digital video — produced from home-built keyboard of VK8KK.

Thus we move onto cameras.

X52. This is similar to the commercial SSTV cameras and it derives all its voltage requirements from its matching monitor. It is technically a "fast scan" camera with inbuilt sampling. One should not confuse the term fast scan as related to normal TV transmissions, as the term indicates. However, it runs at a 4 kHz rate, which is then sampled. It can be seen from this that a "fast scan" output is not compatible with normal TV monitors, and thus cannot be displayed on same. Most commercial SSTV systems employ this technique though lately a new brand has come out with the true fast scan sampled camera. The only draw-back with the former system (4 kHz sampled) is that all set up focusing, lighting etc. must be carried out observing your slow scan monitor. This can be frustrating and time consuming, waiting for adjustments to be seen on each subsequent 8 second frame.

However, all is not as dark as might appear. With additional circuitry your CRO (if you own one — almost essential for SSTV) can be used to display the 5 kHz picture. It is quite acceptable and allows for instant focusing and set up.

Most SSTV manufacturers advertise a "fast scan" adaptor and in nearly all this is what they refer to.

THE TRUE FAST SCAN SAMPLED TECHNIQUE

Here again the amateur is faced with the most important immediate criterion — cost. What is required is a normal fast scan camera as used in a store security set up. It is possible to obtain one of these if one keeps his ear to the ground and is in the right place at the right time. You could be lucky to obtain one with its own monitor or else an old standard TV receiver will suffice. It is not necessary to have an RF output but one has to bring out the video. Incidentally, having procured a fast scan camera, it opens up the possibility of using this for fast scan transmissions on UHF.

The techniques here have been made very simple, and a fast scan to slow scan converter PC board of latest design is available, with a master sync pulse generator board, from the SSTV group.

By using this technique you can instantly switch from FS to SS without defacing your FS camera (you may wish to sell it later) and at all times watch your picture for alignment. In the slow scan mode your fast scan display will tend to flicker slightly (due to the 16 2/3rd Hz frame rate) but is perfectly readable with very little degradation.

Before leaving video generation techniques, a word about SSTV FM modulators. Some of the older circuits use discreet component multivibrators. These are extremely hard to set up and to hold their settings. The latest thing is the NE566 which is a voltage controlled oscillator and the implementation of one of these plus an Operational Amplifier low pass filter will provide a very stable modulator.

OVERSEAS TRENDS

Most stations you exchange video with outside Australia will be using commercial equipment; however there still remains a hard core body who "roll their own" and exercise new techniques. You will quickly recognise these operators because in general, their video will stand out over the normal run-of-the-mill video.

The latest to come from the USA, namely from W0LMD, is direct conversion from fast scan to slow scan without any modification whatsoever to the camera. This complicated process will digitally convert any fast scan video to slow scan which opens up great possibilities.

Further to this, a slow scan to fast scan system is now working as designed by this same person. This is undoubtedly the slow scanner's dream. To do away with all long persistence phosphor tubes. You would then be able to view all received video on your common fast scan receiver. This process is not easy and requires a very large capacity memory which is loaded at slow scan rate and continuously read at fast scan rate. A project of this nature is almost impracticable for the Australian amateur due to the cost of the IC's needed. However, as the IC continues to fall in price, the practical feasibility draws nearer. Maybe by that time some enterprising person will have designed the complex PC boards.

Obviously the next possibility as a flow on is Instant colour slow scan pictures. Technically, with what is available at this very time, it is quite feasible but the catch is how to do it without spending a million dollars.

Another interesting adjunct to the SSTV field is the SSTV video keyboard. As any slow scanner soon finds when trying to have a QSO, or especially in a contest, he ends up with large amounts of paper with call signs, reports, and the like he has been flashing before his camera.

This little magic box eliminates all this. It consists of a keyboard (like a typewriter) in which ASC II characters are generated and eventually converted to SSTV. Hence, you sit back and type away your QSO and video mix with your camera. No fuss, no bother, the hardest thing is the typing. This magic box with its 60 odd ICs will be available from the SSTV group as a PC board by the time you read this.

There is already a great queue of overseas amateurs awaiting its release.

COSTS

The first thing most amateurs ask is "how much will it cost me to get into SSTV?" The second statement is "Oh, it's too difficult for me".

Well, the difficulty angle as previously explained has been overcome by the production of first-class fibre glass solder dipped and gold flashed edge connector PC boards and it is simplicity plus to insert the components.

It is always difficult to put a price tag on a home-built piece of equipment for each amateur has his own degree of junk box. The basic components are hereby listed as a guide, but it must be remembered that nowadays prices change by the hour.

PC board for monitor (X51)	$11.00
PC board for camera (X52)	$11.00
11 inch E26 tube	$26.50 + $1.00 P & P
SSTV sampler	$6.50
SSTV sync pulse generator	$6.50
X7OLO fast to slow scan boards (2 in set)	$20.00 pair
Resistors capacitors IC for monitor —	supplied on request
Resistors capacitors IC for camera —	supplied on request

Monitor and camera kits etc. available on request.

Finally, to answer some of the more general questions that are asked besides availability of circuits and costs which have been covered earlier.

Q. *Where can I obtain information on SSTV?*

A. SSTV handbook published by 73 available from advertisers in AR or SSTV Group.

Q. *Where do you find SSTV operators?*

A. Mostly on 14 MHz (14230 kHz) which is the most active frequency for all slow scan, but there is activity also on 3565, 7125, 21340 and 28650 kHz when conditions permit.

Q. *How can I record SSTV pictures?*

A. As SSTV signals are FM audio tones ranging from 1200 Hz (Sync) to 2300 Hz (white) they can be recorded on a good quality tape recorder. In attempting to record signals blind, (without a monitor working) off air, your results will be doomed to failure. This is due to the correct tuning necessary (in true fact it is not that critical) and without a working monitor is difficult to achieve. SSTV dubbings of tapes for alignment purposes are available to you by sending your tape to the SSTV group. Remember direct electrical patching between recorder and receiver audio is a must, otherwise severe sync pulse distortion will result.

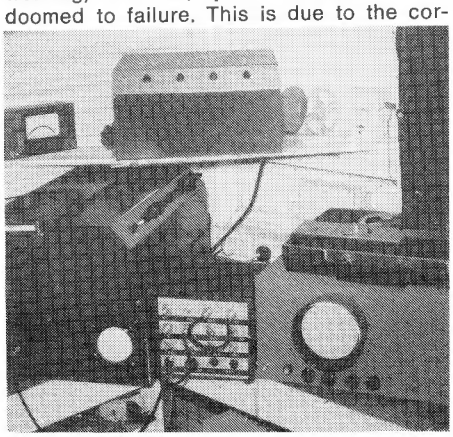

Rig of Barry VK5BS showing home-built flying spot scanner and monitor.

Finally, on tape recorders. Wow and Flutter are the major problems and even with the more expensive cassette types this proves objectionable. Straight lines etc. tend to jitter. Reel to reel recorders to 3¾" or preferably 7½" per second are most satisfactory. However, if you will accept the jitter, use cassettes. Watch out for RFI into your recorder. A lot of cassette recorders with ICs suffer badly in this regard.

Q. *How do I receive information on SSTV?*

A. Join in with the SSTV gang on 14230 kHz and someone will always be willing to slide off the frequency and give you the latest "drum". Everybody is most welcome, but rag-chewing without video on the International SSTV net frequencies should be avoided. SSTV operators in general are poor letter writers and it is quicker to get you acquainted with what concerns you over the air.

Q. *I cannot handle anything with these IC things in them.*

A. A complete untruth! They are simple to fault find and anyway, if you get into trouble, there are plenty of people to help you on 14230. Besides, if you follow the drawings and put the right things in the right place, you should have immediate success. The next SSTV operator has built the same monitor as yours.

Q. *What test equipment is necessary?*

A. (a) Ideally most SSTV stations should be equipped with a DC CRO that will reach to 5 MHz.

(b) Alignment of modulators require precise frequency adjustments which indicates a digital frequency meter; however, tone tapes are available for this purpose.

(c) Normal multimeter etc.

Q. *What modifications to my transmitter are necessary to transmit SSTV?*

A. *Nil* — by using, if you have it, the "phone patch" facilities (e.g. FTDX 400 etc.) the 600 ohms input/output can be fed to and from your SSTV monitor or modulator. Remember SSTV is FM audio and the ratings for PA are continuous duty cycle. Reduce your input accordingly or a PA tube "wipe out" will occur within no time at all. Watch for colour in PA tubes and reduce input below this point when transmitter is correctly tuned.

Typical Symptoms of picture degradation:

Multipath distortion. Picture displaced due to loss of sync or multiple sync. At times picture unreadable even though signals are very strong. Fault is due to propagation causing sync to arrive at different time intervals. Nothing can be done to overcome this trouble. The higher the frequency the less the multi-path effect. Long path signals are less affected than short path of similar or even weaker signal strengths.

Picture too dark — receiver tuned too low in frequency. Often loss of sync will occur at the same time.

Picture too light, lacking in contrast — Receiver tuned too high in frequency. Loss of sync not always noticable and in general vertical sync disappears before horizontal sync.

Snow on picture when signals are strong and sync is good — Too high a level feeding monitor.

One of the most common complaints confronting the SSTV scene revolves around received pictures having too much contrast or too little. In 90 per cent of these cases, the fault lies at the transmission end. It is an easy trap to set up the camera and monitor to give the indications of a perfectly balanced contrast range, however, this need not be so. Thus a "shack standard" must be maintained to overcome this problem. Commercial monitors normally supply a test tape for adjustment purposes. On this tape a grey scale is presented and the monitor should be set up to this standard, controls marked for reference and settings used as such to set up your camera. For those who roll their own, one can procure a test tape as mentioned earlier, or have someone send you grey scale over the air for calibration purposes. Ideally, one should construct a grey scale generator for this purpose. The X51 and E26 monitor combination can easily display six distinct levels of grey scale.

Hopefully, now your interest has been aroused in SSTV, for you can see the way has been paved in VK to help you join in this rewarding aspect of our hobby by allowing you to follow in the footsteps of others who have learned the hard way.

Join in the fun, we hope to *see you* on the nets.

ACTIVE SSTV OPERATORS IN VK, ZL AREAS

VK1AU	Col	VK4NP	Norm
VK2KK	Ted	VK4NO	Tom
VK2KI	Gil	VK5BS	Barry
VK2AGO	George	VK5PV	Peter
VK2BMO	Mike	VK5AV	John
VK3CR	Rod	VK5CY	
VK3TE	Stan	VK5MF	Al
VK3LM	John	VK5WC	Chris
VK3KK	Reg	VK5ZPG	Peter
VK3WX	Bill	VK6CS	Col
VK3PB	Jack	VK7JV	John
VK3EG	Ted	VK7TB	Trevor
VK3MN	Milton	VK7FB	Mike
VK3AQM	Phil	VK7TM	Tom
VK3ABM	Walley	VK8KK	Doug
VK3AQL	Geoff	VK9XX	Tony
VK3AMC	John	P29MC	Mac
VK3BOB	Bob	P29DJ	Graham
VK3BFM	John	ZL1ADW	Malcolm
VK3BAX	Max	ZL1ADY	Ian
VK3YEO	Mac	ZL2AAV	Ralph
VK4TM	Trevor	ZL4PJ	Bronk

SLOW SCAN NET FREQUENCIES

80	3670 kHz	15	21340 kHz
40	7135 kHz	10	28650 kHz
20	14230 kHz		

For information on SSTV, Kits, PC Boards, alignment tapes, picture tubes etc., contact John Wilson, VK3LM, c/- Eastern & Mountain District Radio Club, PO Box 87, Mitcham, Victoria. ●

Telecommand and Telemetry of the OSCAR 6 and 7 Communications Satellites - Part 2

David Hull, VK3ZDH
Project Australis

As had been stated the Australian system of Autocommand was designed and built as a package. Non-availability of computer time on a day to day basis and the possession of certain items of hardware fixed the initial design more on economic grounds than anything else.

AUTOCOMMAND — 2. The Australian System

It was decided from the start to eliminate as much as possible the use of electro-mechanical devices such as tape readers and magnetic tape recorders to ensure as much reliability and freedom from maintenance as possible. Previous experience had proved the practicability of static shift registers and character recognition as a cheap sequential memory source. Baudot code was chosen instead of the more usual ASCII simply because the author owned a Creed Model 7B teleprinter. The initial character recognition of the 31 characters (ignoring upper and lower case) of Baudot has proved more than sufficient for Oscar 6. However, Oscar 7 will require the use of 35 command words alone so upper and lower case memory circuits will be added to allow expansion.

The choice of memory length in terms of bits was taken as a result of the unique window of the Itos satellites (and hence Oscars 6 and 7 which were flown as secondary payloads with these satellites) over Australia. The Itos orbit pattern results in 2 groups of visible orbits over Eastern Australia in a 24 hour period, 3 to 4 orbits centred on 0800 hours east and a second group centred on 2200 hours east. A period of some 8 hours exists in the middle of the day when no orbits are visible. This pattern of command requirements led to the choice of 2 independently loaded shift register memories for a 24 hour period.

MINIMUM LOAD 3 ORBITS 512 BITS

TR Z Z C C V V
WTR Z Z Z B B V V V C C
WTR Z Z B C V Z
NNNN

Words are 2 letters (16 bits) long.

MNEMONIC LIST. Australian Auto Command

Load stop functions only	1st let	2nd let	
Memory Select	Ø	7	
(Ø Deselects Previous Mem)	Ø	8	
	Ø	9	
LOAD	L	D	
READ	R	D	
LOAD or READ FUNCTIONS			
WAIT		W	To be followed by wait period (Hexadecimal x 10)
Transmitter ON	T	R	
Antenna Move (NOT USED 16 bit word)	M		This is 1st letter of 3 letter group.
COMMAND 1		Z	(TRANSPONDER ON)
2		X	(TRANSPONDER OFF) THESE ARE THE
4		C	(435.1 mhz Beacon off) MAIN COMMANDS
8		V	(Telemetry to 10 WPM) USED.
9		B	(AGC ENABLE)
17		A	(Clock Reset)
TRANSMITTER OFF	CR	LF	
Print (Teleprinter)	P	R	
Stop Printing	P	S	
Stop (Reverts to load stop)	N	N	N N

Figure 6 Sample Frame of Teletype Telemetry Data

11001-10111-00000-00101-11101-01010-11111-10101-00111-11011
11001-10111-00000-00101-11101-01010-11111-10101-00111-11011
00977-01558-02873-03730-04157-05534-06368-07198-08614-09734
10854-11220-12348-13149-14000-15674-16075-17598-18664-19025
20238-21363-22532-23123-24672-25389-26131-27506-28907-29211
30871-31089-32140-33585-34613-35831-36722-37255-38234-39189
40645-41452-42950-43001-44335-45786-46479-47362-48919-49604
50057-51482-52942-53717-54451-55184-56999-57500-58236-59968

It was decided early to only pre-programme 24 hours in advance to allow maximum flexibility for last minute changes and as a safety measure in case of power failure, etc. It has been found in the many months of operation of this system that the author is in attendance to check approximately 80 per cent of the orbits commanded. A further benefit of the choice of 2 memories to cover 24 hours has been the ability to use a simple elapsed time clock between orbits. The "wait" period has been fixed at 100 min. and this is derived by counting 50 Hz mains cycles.

With Oscar 6's orbit period of 114.994 minutes the 100 minute wait period allows commands to be sent over at least the initial 50 per cent of the orbit pass. Letters (or symbols) from the shift registers are read in groups of 2 or 3, depending on whether antenna positioning is required, at intervals of 1 minute during the orbit. A "minute" word therefore is of 16 or 24 bit length (2 bits are used as the letter stop function instead of the usual one, to allow even subdivision of the 512 and 1024 bit shift registers used). A two letter "word" is used for the more critical control functions such as "transmitter on" or "off" as a safety measure. Single letters within the 16 or 24 bit minute word are used for command selection and antenna positioning and for time wait periods.

It is intended to allow a more versatile wait period by using a programmable divider as part of the wait clock with its programming code selected as the 2nd letter of the wait command. This will be added when time allows. As the attached mnemonic list shows certain control functions such as memory load, memory read and memory selection (4 separate shift registers of varying multiples of 512 bits are available) can only be selected when the shift register clock source is disabled (stop mode). All control functions are sent from the teletype keyboard in the stop mode. This allows positive checking of S.R. load as a teletype print out. Correct timing is assured by parity check circuits, also the S.R. are always filled to capacity. The recognition of 4 successive 'N' will disable the S.R. clock and place the system back in the load stop mode, i.e. under the command of the keyboard. Figure 1 is an example of a "minimum" load of 512 bits covering 3 orbits and the intervening wait periods.

Antenna positioning is not used in this example, i.e. an omni directional antenna is used. This is adequate for orbits 15° max. elevation or more. Directional antennas on azimuth-elevation mounts must be used on lower elevation orbits or where weather conditions (hot days) may cause bending of the command signal. When antenna positioning is not required a 16 bit (2 letter) word is selected and the appropriate antenna controls switched off. When antenna positioning is required a 24 bit word is used and the first and second letters within the 24 bit minute word frame are used to stop the azimuth and elevation units (in 10° increments) when required. Autohoming circuits are used on these control units after each orbit. The azimuth unit used is a modified commercial Stolle rotator and the elevation unit was made for the author from a DC motor with worm gear drive and remote lead sensing by a friend. The last letter of the 16 or 24 bit word is used to select the command to be sent and through a latch and matrix selects the 3 bit of 7 code to be sent on the command encoder board. This command is sent in brackets of 5 at 1 second intervals at each minute period. The drive to the transmitter is removed between these bursts of commands so that a minimum of radiated signal is used.

As the block diagram shows, the transmitter final power amplifier, a 4C x 250R vacuum tube, which is in a class C protective bias situation, has plate and screen, heater, and bias voltage applied for the whole of the pass. 1 minute before the satellite is due, recognition of the word TR applies power to the heater and bias circuits of the tube and to its blower; 40 seconds after this a time delay relay applies plate and screen power. 20 seconds after this, at the next 1 minute word, the first command is sent when the RF exciter and driver, which are all solid state, are energised. Sufficient drive is used to overcome the bias. Recognition of the characters CRIF turns off power to all stages and the next word sets the wait period until the next orbit.

Positive check is maintained on the system by a series of LED indicators including a 7 segment

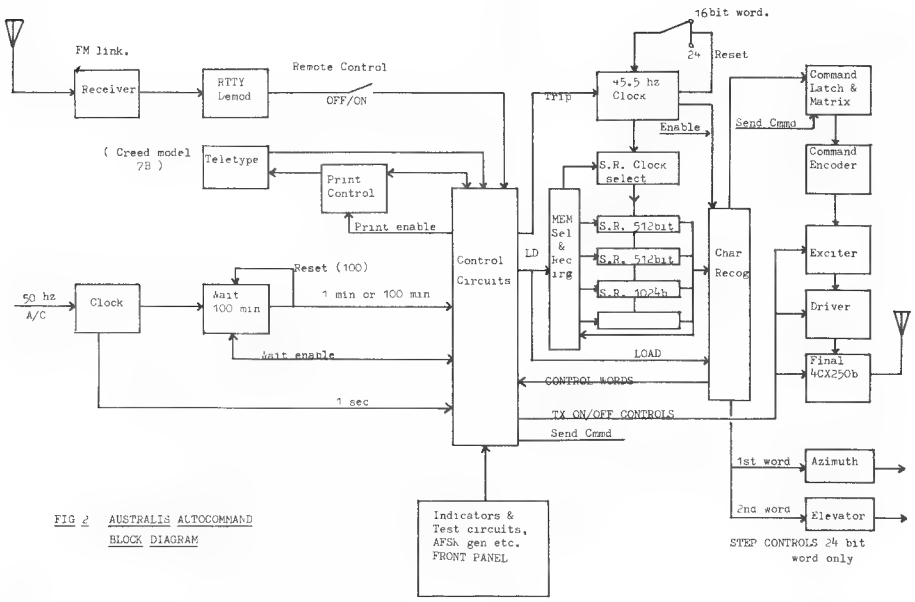

FIG 2 AUSTRALIS AUTOCOMMAND BLOCK DIAGRAM

numeric led indicator which indicates the SR in use and a 3 figure (7 segment leds again) bit counter on the system clock. A further 3 figure counter on the wait clock is being installed.

Several peripheral circuits have been added to allow control of the teleprinter to save paper when printout is not required. Because the system uses the Amateur standard 45.5 Hz Baudot code speed provision has been made to allow remote control of the system and memory loading through an RTTY link on command frequency via an AFSK demodulator built into the unit. This allows precise starting of the clock and hence the whole memory system from a remote source if need be. Other subsystems allow continuous clock operation to check memory loads and provision for dumping the loads into a cassette recorder via a phase coherent AFSK generator also built into the hardware.

The hardware involved is mounted on a total of 15 small plug-in boards to allow easy modificating and servicing. TTL small and medium scale integration is used wherever economically feasible. The SR and some other minor items are National Semiconductor Mos. The matrix at present in use to select the 3 or 7 code is to be replaced by a PROM to eliminate the Huge matrix required for 35 separate commands. The total number of IC involved is approximately 120 and all the NON RF hardware and power supplies are contained within a 7" depth sliding 19" rack tray.

A system of standard orbits in 5° increments of equator crossings is used to predict AZ and EL settings for each orbit. These are generated by a small Fortran programme which allows prediction for any part of the world by specifying the latitude and longitude co-ordinates. A further programme is supplied to each command station that predicts orbits in terms of minute by minute corrections to AZ and EL. As will be seen by the above description the autocommand is just a controller and nothing else. It depends entirely on the correct programme being fed in as 'software' and also on the programme being started at the correct point in time. A more long term and sophisticated alternative is at present under development around one of the new single IC 8 bit parallel processors now available. It is planned with this unit to build virtually a dedicated minicomputer so that the standard orbit programme can be stored and a long term operational programme can be implemented by automatic reference to them and a suitable time reference. It is also hoped to supply these units to the other command stations, nominated by AMSAT world wide, as a 'standard' package.

(To be concluded)

The "Pasatest" Communicating Calculator

Roy Hartkopf, VK3AOH
34 Toolangi Road, Alphington, 3078

There are so many calculators and minicomputers on the market nowadays that to merit the claim that it is the ultimate in its field, the Pasatest Communicating Calculator must be — as indeed it is — a fantastic piece of electronics.

In appearance it is exactly like the average medium priced pocket calculator, but internally the Pasatest is completely different. It is, if one can coin a phrase, actually a digtal handie talkie designed to enable its fortunate owner to pass any examination for which he wishes to sit.

The heart of the unit as can be seen from the block diagram, is a micro teletype transceiver with the difference that instead of a spacer printout the characters appear on the twenty digit alphanumerical display. When he receives the examination paper the owner places the calculator on it, presses a key marked FIX, and casually moves the instrument over the paper. A microvidicon scans the writing and feeds the information into the digital processor and it is then transmitted to a friend with a similar instrument in a parked car near the building. The friend writes out the answer and transmits it to the examinee who copies it down as it appears on the alphanumeric display. So that he can copy at his own pace, each group of words is displayed until the PRO. (proceed) button is pressed, when the next group appears.

A further refinement is the built-in SUPERVISOR DETECTOR which, if a supervisor comes within three metres of the examinee, automatically converts the instrument into an ordinary calculator. When the danger has passed the examinee presses the PRO. (proceed) button and carries on copying down the answer. It will now be clear why the manufacturers, A. S. Windell Ltd., of Triiton on the south coast of Tasmania, do not put their own name on the calculator but market a variety of models exactly resembling various internationally known makes of pocket calculator. All models are at present in extremely short supply but if anyone wishes to send cash or postal notes to the value of $73,000.00 (seventy three thousand dollars) to the writer as a **deposit** he will endeavour to procure a pair as soon as possible.

NOTE 1.—If desired the PASATEST COMMUNICATING CALCULATOR can be directly interfaced to a computer, eliminating any human error. An alternative readout in the form of an automated biro is also under development. ●

PASATEST COMMUNICATING CALCULATOR. Block diagram.

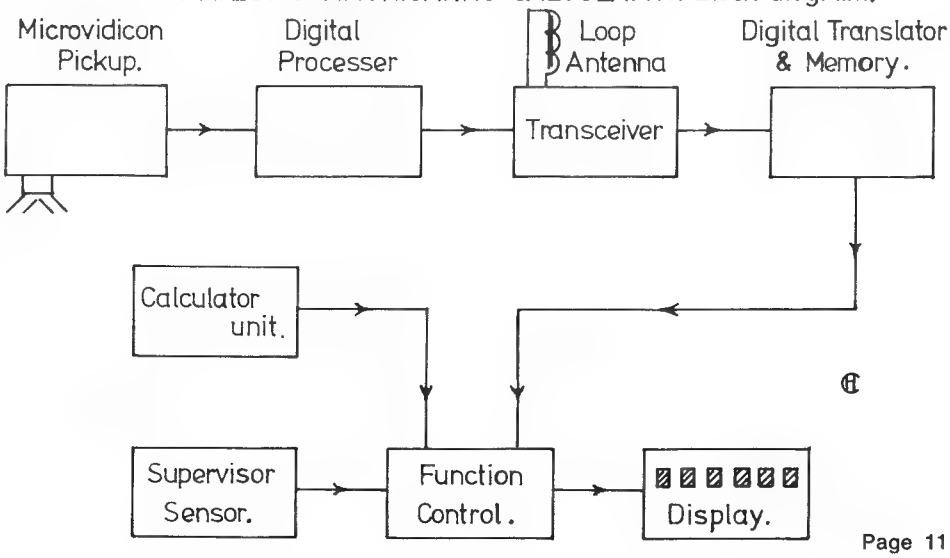

The Wagga Floods — and the Amateur Radio Communications Network September 1974

Harry Hendriks, VK2ZHX
Wagga District Radio Club,
P.O. Box 25, Wagga Wagga, 2650

Members of the Wagga District Radio Club recently proved that once again Amateur radio communication capability is an essential part of this country's Civil Defence, and emergency scheme.

The Murrumbidgee River proved how vicious it could be during late August and early September. Twice it rose to serious flood levels. On Thursday 29th August the mammoth task of evacuating almost the entire population of North Wagga was commenced, for it was envisaged that a severe flood would hit the city within 24 hours. The calculated height was to be in the 31 to 32 feet range. At this height North Wagga would certainly be covered with at least 3 to 4 feet of water. However, due to continued heavy discharge from Burrinjuck Dam plus continued increases in local rainfall, it was realised by the authorities early on Friday the 30th that the river would reach an all-time high of over 35 feet. (The highest reading for over 100 years). The peak was reached late Friday night at 35 feet 3 inches.

In so far as the Wagga District Radio Club was concerned, they were initially requested by Civil Defence to be on standby as a back-up for the existing SSB and 27 MHz equipment. As early as Thursday night it was obvious that the Civil Defence Systems would not be satisfactory for the "short haul" work that was to be done. Long skip on 3730 kHz, many on-frequency heterodynes, plenty of ZLs, plus great quantities of general transient noise interference, was making the passing of even simple routine messages a very time-consuming affair. Coupled to this was the continuously increasing need for fast "evacuation-type" messages from North Wagga back to Civil Defence Headquarters on the city side of the river.

At approximately 10 p.m. on Thursday, the Wagga and District Radio Club VHF Net was officially called in to replace Civil Defence SSB on the major traffic handling nets. Continuous traffic was then passed (via WDRC VHF) between the Wardens Post evacuation centre and Headquarters. Whilst our Amateur message handling was far removed from the official Civil Defence procedure, we would mention that at the peak of traffic important messages were being handled, without any known errors, at a rate of at least two a minute. The noise-free signals that were being exchanged between our operators via VHF over such a relatively short distance when compared with the noises and problems present with the HF SSB did impress many influential people on the scene. When it was realised that the river was to reach in excess of 35 feet, Civil Defence ordered all personnel out of North Wagga (including our team, minus their vehicle which was abandoned).

The major scene of activity then switched to the main city side of the river. For those readers who have never visited Wagga we would mention that many miles of major levee banks surround the entire northern side of our city, with minor banks protecting the eastern and western sectors. With the prospects of at least a 35 foot river, and with the major levee bank designed many years ago to stand against a 36 foot river, a very serious situation had developed. A concentrated effort was made by every available service facility in Wagga to generally reinforce and increase in height all levee banks. As the river rose, the main duty of WDRC VHF operators was to now work with Civil Defence levee patrols and to report problems and requirements as they appeared. At one time during the Friday night there were five VHF mobiles on patrols with reports going directly to Local Headquarters of Civil Defence.

To go into details of the various situations and experiences encountered during the operation would take pages to relate. Suffice to say that the WDRC supplied continuous communication between base and out-stations from around 10 p.m. on Thursday till around 11 a.m. on the Saturday. By this time the Murrumbidgee was past its peak at Wagga and was very slowly falling. An electricity authority team took over from the WDRC on routine levee patrols and our members took a well earned rest on stand-by.

Because of the high average rainfall in our area this year, it was found that the surrounding flooded country-side was very slow in "running off", and as late as Wednesday many adjacent areas to the river were still covered by feet of still water.

On Thursday 5th September, with the river still in this swollen state, word was received that a second flood could be expected by the weekend. Expected height would be in the region of 31 feet.

Once again the WDRC was called in to provide all local Civil Defence communications. Two VHF bases were set up (Local Headquarters and North Wagga School), plus two river reading posts approximately 6 and 12 miles up stream. In addition to these "fixed" stations, levee bank patrols in North Wagga were to be covered by VHF. The whole relief operation this time was centred on the saving of North Wagga homes from being inundated with water for the second time in just over one week. The operation was successful due to the efforts of many volunteers from all sections of the community. This second flood resulted in our operators being again on duty continuously from 9 a.m. on Friday 4th till 9 a.m. on Sunday 6th September, when the river had peaked and was slowly falling.

At the time of writing, the areas surrounding the Murrumbidgee from Gundagai to Narrandera are mostly covered with various depths of still, muddy water. We all hope that we have seen the last of floods for many years, but with an unusually high snow build-up in the catchment area waiting to thaw, plus the rather ominous looking weather maps, we are feeling a little uneasy at the moment. ●

OVERSEAS PUBLICATIONS SUBSCRIPTIONS

- Inflation and new exchange rates. "Rapid inflation", says the editorial in QST for Sept. '74, "the past couple of years has had a severe impact on ARRL's budget".
- The following are the latest 1975 subscription rates which supersede all previous advices (including that on p.25 of October AR) —

$A	1 year	2 years	3 years
Ham Radio	6.25	10.50	15.00
CQ*	6.50	11.00	14.50
QST	8.50	17.00	25.50
Break-In*	4.20	—	—
73	7.00	—	13.50
Radio Communication†	8.80	—	—
VHF Communications*	4.00 — Surface 6.20 — Air Mail		
CQ-TV	2.35	—	—

*Present rates.
†Please ask for membership form.

- Write for these and details of other items to:

MAGPUBS
P.O. BOX 150
TOORAK, VIC. 3142

- ***Remember these as splendid Christmas presents***

LIQUID CRYSTAL DISPLAYS

We have a large range of Liquid Crystal Displays available ex stock. Prices start below **$10.00** per unit. Ask for our List L/C 1 which describes all units and includes a collection of circuit diagrams also a quartz clock with 4-digit liquid crystal display operating on 1.5V and typical power dissipation of 30mW.

List L/C 1 **$1.00**

ANTI-REFLECTION FILTERS

Anti-Reflection Filters designed for placement in front of digital displays and other light emitting displays for improved contrast and readability. Front surface reflection is reduced to less than 1 per cent. Also suitable for CRT displays, gas discharge displays, etc.

DIGITAL CLOCK DISPLAYNG LOCAL AND GREENWICH TIME

Also displaying correct date and month, with 6-digit display, switches transmitter on or off has also an alarm. Total cost of ICs **$34.50**
Circuit diagram and parts list DC LG3 **$1.00**

WHK POWER AMPLIFIER MODULES

35W RMS flat to 100 kHz. Output short circuit proof due to internal power limiting. If desired can be used as instrument amplifier with flat response down to DC. Slew rate 200 V/uS. Ideal for high quality audio equipment. Prices **$13.39** and **$16.58**
Higher priced unit conforms to MIL spec.

SOLID STATE TEMPERATURE TRANSDUCER

Highly accurate temperature measurement over a temperature range of —55°C to +125°C output is directly proportional to temperature. Linearity typ. 0.018 per cent using internal op amp and external resistors any temperature scale factor is easily obtained. **$11.50**
Collection of application notes LX5600 **$0.50**

DIGITAL FREQUENCY METER KIT

We have complete time base boards with outputs from 10 MHz down to 0.1 HZ with gated output, 10 MHz crystal with zero-beat provision **$32.78**
Wired counting decades with latch and large LED display, gold plated edge connector, leading zero blanking **$15.53**
WHK C3 control module for frequency meters and internal timer, with above items time can be measured to 100 nS (1/10,000,000th sec.) **$14.38**

MINITRON DISPLAYS

Incandescent filament 7-segment display, direct interface to 7447. Any colour can be filtered out by using our anti-reflection filters **$2.18**

CALCULATORS

LET'S FACE IT . . . The calculator market is flooded with **has been's, maybe's** and **winners** — You just don't know which one to choose.

Although the big guys are spending advertising fortunes, they'll never capture the whole market, because for every customer that is presold on a big brand name, there's one who profers to comparison-shop and look for real value.

You can't mention value without remembering that value is the whole W.H.K. story — offering the most for your money. So we position ourselves in the market for calculators with brands that make a sale where the so-called "lead" brands haven't got the goods for the right price.

Another think for you is that W.H.K. have complete servicing facilities for calculators, this is a solid business with plenty of competition, but we are putting the pressure on our competitors to keep up with us.

We are Australian Sole Distributor for LLOYD'S and MITS (MICRO INSTRUMENTATION & TELEMETRY SYSTEMS) and Distributors for NS (NATIONAL SEMICONDUCTORS), ROCKWELL and ADLER.

Ask for our free catalogue listing the following:

ADVANCED SCIENTIFIC POCKET CALCULATORS

PROGRAMMABLE SCIENTIFIC DESK CALCULATORS

CONVERTER with 112 direct conversions

FINANCIER with four separate MEMORIES

ADLER and LLOYD'S PRINTING CALCULATORS

At present we stock more than 20 different models.

Please send following (tick square)

☐ **CALCULATOR CATALOGUE** (free)

☐ **GENERAL CATALOGUE** (free)

APPLICATION NOTES L/C1 ☐, **DC LG3** ☐, **LX5600** ☐

Name .....

Address .....

..... Postcode .....

W.H.K. ELECTRONIC & SCIENTIFIC INSTRUMENTATION

MANUFACTURER, IMPORTER & WHOLESALE MERCHANT

2 GUM ROAD, ST. ALBANS, VICTORIA, AUSTRALIA 3021 PHONE 396 3742

POSTAL ADDRESS: P.O. BOX 147, ST. ALBANS, VICTORIA, AUSTRALIA 3021

Economical Mobile/Base Station FT-201

• Solid State 80 thru 10 Meter Transceiver

YAESU now brings you the newest addition to its growing family of Solid State transceivers; the FT-201. Performance and portability are among the key features of this economical transceiver along with YAESU innovated modules to simplify service and repair. The FT-201 has features which you would expect to find only in units costing much more.

GENERAL

Frequency Range: 3.5–4.0 MHz, 7.0–7.5 MHz, 14.0–14.5 MHz, 21.0–21.5 MHz, 28.0–30.0 MHz, WWV 15 MHz (receive only).

Mode: Selectable USB, LSB, CW or AM.
Frequency Stability: Within 100 Hz during any 30 minute period after warm-up. Not more than 100Hz with 10% line voltage variation.
Calibration Accuracy: 2 KHz maximum after 100 KHz calibration.
Backlash: Not more than 50 Hz.
Antenna Impedance: 50 to 75 Ohm unbalanced nominal.
Circuitry: 32 Transistors, 9 FET, 6 Integrated Circuits, 52 Diodes and 3 Tubes.
Power Requirement: 100/110/117/200/220/234 V AC, 50/60 Hz, 380 Watts maximum, or 13.5V DC nominal, 6.7 A for standby, 0.7 A for receive (Heater OFF) and 24 A for transmit.
Size: 340(W) x 153(H) x 285(D) m/m.
Weight: 15 Kg.

RECEIVER

Sensitivity: 0.3 μV for 10 dB Noise plus Signal to Noise Ratio on 14 MHz.
Selectivity: 2.4 KHz nominal bandwidth at 6 dB down, 3.8 KHz at 60 dB down on SSB, CW and AM. 600 Hz nominal bandwidth at 6 dB down, 1.2 KHz at 60 dB down with optional CW filter. 600 Hz nominal bandwidth at 6 dB down, 12 KHz at 60 dB down with optional AM filter.
Harmonic & Other Spurious Response: Image Rejection better than 50 dB. Internal Spurious Signal below 1 μV equivalent to antenna input.
Automatic Gain Control: AGC threshold nominal 6 μV. Selectable AGC time constant, fast or slow. Fast attack time 3 milli-second and slow attack time 5 milli-second. Fast release time 0.35 second and slow release time 2 seconds.
Audio Noise Level: Not less than 40 dB below 1 Watt.
Audio Output: 3 Watts to internal or external speaker at 4 Ohm impedance.
Audio Distortion: Less than 10% at 3 Watts output.

TRANSMITTER

Input Power: 260 Watts PEP on SSB, 180 Watts on CW at 50% duty cycle and 80 Watts on AM. (Slightly lower on 10 meter.)
Microphone: 50 K Ohm dynamic type.
Carrier Suppression: −40 dB.
Sideband Suppression: −50 dB.
Spurious Radiation: −40 dB.
Distortion Products: −30 dB.
Frequency Response: 300 Hz to 2700 Hz ± 3 dB.
Final Tube: 6JS6C x 2.

bail ELECTRONIC SERVICES
60 Shannon St., Box Hill North, Vic., 3129.
Ph. 89-2213
QLD. MITCHELL RADIO CO., 59 Albion Road, Albion, 4010 Ph. 57 6830
N.S.W. STEPHEN KUHL, P.O. Box 56, Mascot, 2020 Ph. Day 667 1650
S.A.: FARMERS RADIO PTY. LTD., 257 Angas Street, Adelaide, 5000 Ph. 23 1268
W.A. H. R. PRIDE, 26 Lockhart Street, Como, 6152 Ph. 60 4379

WIRELESS INSTITUTE OF AUSTRALIA

PROJECT AUSTRALIS

STANDARD ORBITS — OSCAR 6

This set of Standard Orbits and the Ascending Nodes (the longitude in degrees West and the time in hours, minutes and seconds, G.M.T., of the satellite's path over the Earth, when it crosses the Equator, travelling into the Northern Hemisphere) is the only information needed to track OSCAR 6. It also allows calculation of when the satellite will be in range of the areas around other State capitals.

The morning (Southbound, at around 0900, local time) orbits over Australia have Ascending Nodes between 80 and 290 degrees West, while the evening (Northbound, at 2100 local time) orbits have Ascending Nodes between 150 and 275 degrees West. As a guide, the morning orbits will have smaller numbers at the start of the "ASCN NODE ADD MINS" column (between 56 and 82 minutes), than the evening orbits (between 86 and 104 minutes).

Ascending Nodes will be transmitted in Morse Code by the Codestore system on OSCAR 6 (29.45 and 435.1 MHz), and will also be announced on the weekly Divisional broadcasts.

If you are in or near Sydney, and want to track a (morning) orbit which has an ascendin node of 359 degrees West at 2157 G.M.T., select the closest Standard Orbit from the Sydney set — 360 degrees West. Add 58 minutes to 2157 G.M.T., and you will hear the satellite at 2255 G.M.T. Time, azimuth and elevation points are given every two minutes on the Standard Orbits.

Because the satellite is in an almost circular (1460Km), near-polar orbit, with each orbit being completed in 115 minutes, given one Acending Node (say, 330 degrees West at 1905 G.M.T.), later Ascending Nodes can be determined by simply adding the distance in degrees which separates the orbits at the Equator (the Nodal Increment, 28.8 degrees), to 330. and adding 115 minutes to 1095 G.M.T. The result is, in round figures, 359 degrees West at 2157 G.M.T., for the next orbit.

To see whether the orbit which you are tracking in Sydney will be in range of Perth, look at the Perth Standard Orbit which corresponds with the orbit that you are following. If you are tracking an orbit with an Ascending Node of 359 degrees West and are using the 360 degrees West Standard Orbit for Sydney, OSCAR 6 will be in range of Sydney from 58 to 78 minutes after the Ascending Node (2255 to 2315 G.M.T., on the example above), a total of 20 minutes. The same orbit will be in range of Perth from 68 to 78 minutes after the Ascending Node (2305 to 2315 G.M.T.). Therefore, that orbit will be in range of both Sydney and Perth from 2305 to 2315 G.M.T., so that 10 minutes of contact through the satellite will be possible. By slecting an orbit that passes midway between Sydney and Perth (e.g., an Ascending Node of 25 degrees West), contacts of up to 18 minutes are possible. For contact with New Zealand, orbits to the East of Australia should be used, while for contacts into Asia, orbits in the North and West should be used.

Users of Standard Orbits should note that the sets of Southbound Orbits start towards the end of the set (315 degrees West for Sydney) and resume at the beginning of each set (0 degrees West for Sydney), ending near the middle of the set (45 degrees West for Sydney). They are then immediately followed by the first of the Northbound orbits (150 degrees West for Sydney). It was not possible in the short time available after the OSCAR 6 launch rocket was changed to put the Southbound orbits in continuous order).

Assuming a launch at 1715 G.M.T., on 9th, October, the first Ascending Nodes bringing orbits in range of Australia will be: —

Orbit 1 324 W at 1842 GMT 9/10/72 Southbound
Orbit 2 353 W at 2037 GMT 9/10/72 Southbound
Orbit 3 22 W at 2232 GMT 9/10/72 Southbound
Orbit 4 50 W at 0028 GMT 10/10/72 Southbound
Orbit 8 166 W at 0809 GMT 10/10/72 Northbound
Orbit 9 194 W at 1004 GMT 1/10/72 Northbound
Orbit 223 W at 1159 GMT 10/10/72 Northbound
Orbit 252 W at 1354 GMT 10/10/72 Northbound

Any change in the OSCAR 6 launch date will alter the times, but not the longitudes of the Ascending Nodes. Any alterations will be notified on Divisional broadcasts.

INSERT WITH AMATEUR RADIO OCTOBER 1972

ADELAIDE

ASCN NODE 0. W.

ADD MINS	AZ	EL
60.0	46	0
62.0	51	7
64.0	58	14
66.0	68	23
68.0	85	32
70.0	112	38
72.0	141	35
74.0	162	26
76.0	174	17
78.0	181	9
80.0	186	2

ASCN NODE 5. W.

ADD MINS	AZ	EL
60.0	39	3
62.0	43	11
64.0	49	20
66.0	59	31
68.0	80	44
70.0	119	50
72.0	154	41
74.0	172	28
76.0	181	14
78.0	186	9
80.0	190	2

ASCN NODE 10. W.

ADD MINS	AZ	EL
60.0	31	6
62.0	33	14
64.0	37	25
66.0	46	40
68.0	78	59
70.0	138	64
72.0	173	45
74.0	184	29
76.0	189	17
78.0	191	8
80.0	193	1

ASCN NODE 15. W.

ADD MINS	AZ	EL
58.0	21	1
60.0	21	8
62.0	21	17
64.0	22	29
66.0	24	48
68.0	35	75
70.0	187	70
72.0	194	44
74.0	195	27
76.0	196	16
78.0	196	7
80.0	196	0

ASCN NODE 20. W.

ADD MINS	AZ	EL
58.0	12	2
60.0	11	10
62.0	8	19
64.0	4	32
66.0	355	50
68.0	311	72
70.0	228	61
72.0	211	39
74.0	205	24
76.0	202	14
78.0	200	5

ASCN NODE 25. W.

ADD MINS	AZ	EL
58.0	3	3
60.0	360	10
62.0	355	19
64.0	346	31
66.0	327	45
68.0	287	55
70.0	243	47
72.0	223	33
74.0	213	20
76.0	207	11
78.0	203	4

ASCN NODE 30. W.

ADD MINS	AZ	EL
58.0	354	3
60.0	349	10
62.0	341	18
64.0	329	27
66.0	309	37
68.0	278	41
70.0	249	35
72.0	230	26
74.0	219	16
76.0	211	9
78.0	206	2

ASCN NODE 35. W.

ADD MINS	AZ	EL
58.0	345	2
60.0	339	8
62.0	330	15
64.0	316	22
66.0	297	28
68.0	274	30
70.0	251	26
72.0	234	20
74.0	223	12
76.0	215	6
78.0	209	0

ASCN NODE 40. W.

ADD MINS	AZ	EL
58.0	337	0
60.0	329	6
62.0	319	11
64.0	306	17
66.0	289	21
68.0	270	21
70.0	252	19
72.0	237	14
74.0	226	9
76.0	217	3

ASCN NODE 45. W.

ADD MINS	AZ	EL
60.0	321	3
62.0	311	8
64.0	298	12
66.0	284	14
68.0	268	15
70.0	252	13
72.0	239	9
74.0	228	5
76.0	219	0

ASCN NODE 50. W.

ADD MINS	AZ	EL
60.0	313	0
62.0	304	4
64.0	292	7
66.0	279	9
68.0	265	9
70.0	252	8
72.0	240	5
74.0	230	2

ASCN NODE 55. W.

ADD MINS	AZ	EL
62.0	298	0
64.0	287	2
66.0	275	4
68.0	263	4
70.0	251	3
72.0	240	1

ASCN NODE 60. W.

ADD MINS	AZ	EL
66.0	272	0
68.0	261	0

ASCN NODE 150. W.

ADD MINS	AZ	EL
104.0	101	0
106.0	90	0

ASCN NODE 155. W.

ADD MINS	AZ	EL
100.0	122	1
102.0	111	3
104.0	99	4
106.0	87	4
108.0	75	3
110.0	64	1

ASCN NODE 160. W.

ADD MINS	AZ	EL
98.0	132	1
100.0	122	4
102.0	110	7
104.0	97	9
106.0	83	9
108.0	70	7
110.0	58	4
112.0	48	1

ASCN NODE 165. W.

ADD MINS	AZ	EL
96.0	142	0
98.0	134	4
100.0	123	8
102.0	110	12
104.0	95	14
106.0	79	14
108.0	64	12
110.0	51	8
112.0	41	4

ASCN NODE 170. W.

ADD MINS	AZ	EL
96.0	144	2
98.0	136	8
100.0	125	13
102.0	111	18
104.0	93	21
106.0	74	21
108.0	57	17
110.0	43	12
112.0	33	7
114.0	25	1

ASCN NODE 175. W.

ADD MINS	AZ	EL
92.0	152	0
94.0	145	6
96.0	137	12
98.0	124	18
100.0	108	23
102.0	87	26
104.0	66	24
106.0	49	19
108.0	36	12
110.0	27	6
112.0	20	0

ASCN NODE 180. W.

ADD MINS	AZ	EL
92.0	154	2
94.0	148	8
96.0	139	15
98.0	127	23
100.0	108	31
102.0	82	34
104.0	56	31
106.0	38	23
108.0	26	15
110.0	18	8
112.0	12	1

ASCN NODE 185. W.

ADD MINS	AZ	EL
96.0	146	5
98.0	139	11
100.0	128	18
102.0	112	25
104.0	91	29
106.0	67	29
108.0	47	23
110.0	33	16
112.0	23	9
114.0	16	3

ASCN NODE 190. W.

ADD MINS	AZ	EL
94.0	154	1
96.0	150	7
98.0	143	15
100.0	132	24
102.0	115	34
104.0	88	40
106.0	56	38
108.0	34	29
110.0	20	19
112.0	12	11
114.0	7	4

ASCN NODE 195. W.

ADD MINS	AZ	EL
94.0	157	3
96.0	154	10
98.0	148	19
100.0	140	30
102.0	122	44
104.0	82	55
106.0	38	48
108.0	17	33
110.0	7	21
112.0	1	11
114.0	357	4

ASCN NODE 200. W.

ADD MINS	AZ	EL
94.0	160	4
96.0	158	12
98.0	156	22
100.0	150	36
102.0	136	56
104.0	68	73
106.0	9	54
108.0	357	34
110.0	352	21
112.0	350	11
114.0	348	3

ASCN NODE 205. W.

ADD MINS	AZ	EL
94.0	164	6
96.0	164	14
98.0	164	25
100.0	165	41
102.0	170	65
104.0	317	81
106.0	336	52
108.0	338	32
110.0	339	19
112.0	339	10
114.0	339	2

ASCN NODE 210. W.

ADD MINS	AZ	EL
92.0	167	0
94.0	168	7
96.0	171	15
98.0	175	26
100.0	184	42
102.0	212	61
104.0	281	62
106.0	312	43
108.0	322	27
110.0	327	16
112.0	329	7
114.0	331	0

ASCN NODE 215. W.

ADD MINS	AZ	EL
92.0	170	1
94.0	173	8
96.0	177	16
98.0	185	26
100.0	201	39
102.0	233	50
104.0	274	46
106.0	298	33
108.0	310	22
110.0	317	12
112.0	321	5

ASCN NODE 220. W.

ADD MINS	AZ	EL
92.0	173	1
94.0	178	8
96.0	184	16
98.0	196	25
100.0	214	34
102.0	243	38
104.0	271	34
106.0	298	25
108.0	301	16
110.0	308	8
112.0	313	1

ASCN NODE 225. W.

ADD MINS	AZ	EL
92.0	176	2
94.0	182	8
96.0	191	15
98.0	205	22
100.0	224	28
102.0	247	29
104.0	268	24
106.0	283	18
108.0	294	11
110.0	301	4

ASCN NODE 230. W.

ADD MINS	AZ	EL
92.0	179	2
94.0	187	8
96.0	197	13
98.0	212	19
100.0	230	22
102.0	249	21
104.0	266	17
106.0	279	12
108.0	288	6
110.0	295	0

ASCN NODE 235. W.

ADD MINS	AZ	EL
92.0	183	2
94.0	192	7
96.0	203	11
98.0	217	15
100.0	233	16
102.0	250	15
104.0	264	11
106.0	275	6
108.0	284	2

ASCN NODE 240. W.

ADD MINS	AZ	EL
92.0	186	1
94.0	196	6
96.0	208	9
98.0	221	11
100.0	236	11
102.0	250	9
104.0	262	6
106.0	272	2

ASCN NODE 245. W.

ADD MINS	AZ	EL
92.0	189	1
94.0	199	4
96.0	211	7
98.0	224	8
100.0	237	7
102.0	250	5
104.0	260	1

ASCN NODE 250. W.

ADD MINS	AZ	EL
92.0	192	0
94.0	203	3
96.0	214	4
98.0	226	4
100.0	238	3
102.0	249	1

ASCN NODE 255. W.

ADD MINS	AZ	EL
94.0	205	1
96.0	217	1
98.0	228	1

ASCN NODE 325. W.

ADD MINS	AZ	EL
74.0	130	1
76.0	141	1
78.0	153	1
80.0	163	0

ASCN NODE 330. W.

ADD MINS	AZ	EL
70.0	109	0
72.0	120	2
74.0	131	4
76.0	144	4
78.0	155	3
80.0	166	1

ASCN NODE 335. W.

ADD MINS	AZ	EL
68.0	98	1
70.0	108	4
72.0	120	6
74.0	133	7
76.0	146	7
78.0	159	5
80.0	169	2

ASCN NODE 340. W.

ADD MINS	AZ	EL
66.0	87	1
68.0	96	5
70.0	108	9
72.0	121	11
74.0	136	11
76.0	150	10
78.0	162	6
80.0	172	2

ASCN NODE 345. W.

ADD MINS	AZ	EL
64.0	75	1
66.0	83	5
68.0	94	10
70.0	108	14
72.0	124	16
74.0	140	15
76.0	155	12
78.0	167	8
80.0	176	3

ASCN NODE 350. W.

ADD MINS	AZ	EL
64.0	70	5
66.0	79	11
68.0	92	16
70.0	108	20
72.0	127	22
74.0	145	19
76.0	160	14
78.0	171	9
80.0	179	3

ASCN NODE 355. W.

ADD MINS	AZ	EL
62.0	58	3
64.0	65	9
66.0	75	16
68.0	89	23
70.0	109	28
72.0	132	28
74.0	152	23
76.0	167	16
78.0	176	9
80.0	183	3

ASCN NODE 360. W.

ADD MINS	AZ	EL
60.0	46	0
62.0	51	7
64.0	58	14
66.0	68	23
68.0	85	32
70.0	112	38
72.0	141	35
74.0	162	26
76.0	174	17
78.0	181	9
80.0	186	2

ASCN NODE 0. W.

ADD MINS	AZ	EL

HOBART

ASCN NODE 0. W.

ADD MINS	AZ	EL
62.0	28	5
64.0	29	13
66.0	31	23
68.0	35	38
70.0	47	60
72.0	132	76
74.0	182	53
76.0	191	33
78.0	194	20
80.0	195	10
82.0	196	3

ASCN NODE 5. W.

ADD MINS	AZ	EL
60.0	19	0
62.0	18	6
64.0	18	15
66.0	17	26
68.0	14	43
70.0	7	68
72.0	221	77
74.0	204	49
76.0	201	31
78.0	200	18
80.0	199	9
82.0	198	2

ASCN NODE 10. W.

ADD MINS	AZ	EL
60.0	11	0
62.0	9	7
64.0	6	16
66.0	1	27
68.0	351	43
70.0	320	63
72.0	249	62
74.0	219	43
76.0	210	27
78.0	205	16
80.0	202	7
82.0	200	0

ASCN NODE 15. W.

ADD MINS	AZ	EL
60.0	2	1
62.0	359	8
64.0	354	16
66.0	345	26
68.0	330	39
70.0	298	51
72.0	254	48
74.0	229	35
76.0	216	23
78.0	209	13
80.0	204	6

ASCN NODE 20. W.

ADD MINS	AZ	EL
60.0	353	1
62.0	349	7
64.0	342	15
66.0	331	24
68.0	314	33
70.0	286	39
72.0	256	37
74.0	234	28
76.0	221	19
78.0	212	11
80.0	206	4

ASCN NODE 25. W.

ADD MINS	AZ	EL
60.0	345	0
62.0	339	6
64.0	331	13
66.0	319	20
68.0	302	26
70.0	280	30
72.0	256	28
74.0	237	22
76.0	224	15
78.0	215	8
80.0	208	2

ASCN NODE 30. W.

ADD MINS	AZ	EL
62.0	330	4
64.0	321	10
66.0	309	15
68.0	294	20
70.0	275	22
72.0	255	21
74.0	239	17
76.0	226	11
78.0	217	5
80.0	209	0

ASCN NODE 35. W.

ADD MINS	AZ	EL
62.0	322	2
64.0	313	7
66.0	301	11
68.0	287	14
70.0	271	16
72.0	255	15
74.0	240	12
76.0	228	8
78.0	218	3

ASCN NODE 40. W.

ADD MINS	AZ	EL
64.0	305	3
66.0	294	7
68.0	282	10
70.0	268	11
72.0	253	10
74.0	240	8
76.0	229	4
78.0	219	1

ASCN NODE 45. W.

ADD MINS	AZ	EL
64.0	299	0
66.0	289	3
68.0	277	5
70.0	265	6
72.0	252	6
74.0	240	4
76.0	229	1

ASCN NODE 50. W.

ADD MINS	AZ	EL
68.0	273	1
70.0	262	2
72.0	250	2
74.0	239	1

ASCN NODE 150. W.

ADD MINS	AZ	EL
100.0	112	0
102.0	101	0

ASCN NODE 155. W.

ADD MINS	AZ	EL
96.0	133	0
98.0	122	2
100.0	111	3
102.0	99	4
104.0	87	3
106.0	76	2

ASCN NODE 160. W.

ADD MINS	AZ	EL
96.0	133	2
98.0	122	5
100.0	110	7
102.0	96	8
104.0	83	8
106.0	70	5
108.0	60	2

ASCN NODE 165. W.

ADD MINS	AZ	EL
94.0	143	1
96.0	134	5
98.0	122	9
100.0	109	12
102.0	94	13
104.0	78	12
106.0	65	10
108.0	53	6
110.0	43	1

ASCN NODE 170. W.

ADD MINS	AZ	EL
94.0	144	3
96.0	135	8
98.0	123	13
100.0	108	17
102.0	90	19
104.0	73	18
106.0	57	14
108.0	45	9
110.0	36	4

ASCN NODE 175. W.

ADD MINS	AZ	EL
92.0	152	0
94.0	145	6
96.0	137	12
98.0	124	18
100.0	108	23
102.0	87	26
104.0	66	24
106.0	49	19
108.0	36	12
110.0	27	6
112.0	20	0

ASCN NODE 180. W.

ADD MINS	AZ	EL
92.0	154	2
94.0	148	8
96.0	139	15
98.0	127	23
100.0	108	31
102.0	82	34
104.0	56	31
106.0	38	23
108.0	26	15
110.0	18	8
112.0	12	1

ASCN NODE 185. W.

ADD MINS	AZ	EL
92.0	155	3
94.0	150	11
96.0	143	19
98.0	131	30
100.0	110	40
102.0	75	45
104.0	43	38
106.0	24	27
108.0	14	17
110.0	7	9
112.0	3	2

ASCN NODE 190. W.

ADD MINS	AZ	EL
92.0	157	5
94.0	154	13
96.0	149	23
98.0	138	36
100.0	115	52
102.0	63	58
104.0	24	45
106.0	9	29
108.0	1	18
110.0	357	9
112.0	354	2

ASCN NODE 195. W.

ADD MINS	AZ	EL
90.0	161	0
92.0	160	7
94.0	158	15
96.0	155	26
98.0	149	43
100.0	129	66
102.0	30	71
104.0	359	47
106.0	352	30
108.0	349	17
110.0	347	8
112.0	345	1

ASCN NODE 200. W.

ADD MINS	AZ	EL
90.0	163	1
92.0	163	8
94.0	163	17
96.0	164	29
98.0	165	48
100.0	177	75
102.0	327	70
104.0	334	44
106.0	336	27
108.0	337	16
110.0	337	7
112.0	337	0

ASCN NODE 205. W.

ADD MINS	AZ	EL
90.0	165	2
92.0	166	9
94.0	169	19
96.0	174	31
98.0	185	49
100.0	229	67
102.0	296	57
104.0	316	38
106.0	323	23
108.0	326	13
110.0	328	5

ASCN NODE 210. W.

ADD MINS	AZ	EL
90.0	167	3
92.0	170	10
94.0	175	19
96.0	184	31
98.0	204	45
100.0	245	53
102.0	284	44
104.0	303	30
106.0	312	19
108.0	317	10
110.0	320	3

ASCN NODE 215. W.

ADD MINS	AZ	EL
90.0	169	4
92.0	174	11
94.0	182	20
96.0	194	30
98.0	217	39
100.0	250	41
102.0	277	34
104.0	294	23
106.0	303	14
108.0	309	6
110.0	312	0

ASCN NODE 220. W.

ADD MINS	AZ	EL
90.0	172	4
92.0	178	11
94.0	188	19
96.0	203	27
98.0	226	33
100.0	252	32
102.0	273	25
104.0	287	17
106.0	296	10
108.0	302	3

ASCN NODE 225. W.

ADD MINS	AZ	EL
90.0	175	5
92.0	183	11
94.0	194	18
96.0	210	24
98.0	231	26
100.0	252	24
102.0	269	18
104.0	281	12
106.0	290	6
108.0	296	0

ASCN NODE 230. W.

ADD MINS	AZ	EL
88.0	170	0
90.0	177	5
92.0	187	11
94.0	199	16
96.0	216	20
98.0	235	21
100.0	252	18
102.0	266	13
104.0	277	7
106.0	285	2

ASCN NODE 235. W.

ADD MINS	AZ	EL
88.0	172	0
90.0	180	5
92.0	191	10
94.0	204	14
96.0	220	16
98.0	237	15
100.0	251	12
102.0	264	8
104.0	273	3

ASCN NODE 240. W.

ADD MINS	AZ	EL
88.0	174	1
90.0	183	5
92.0	194	9
94.0	208	12
96.0	223	13
98.0	238	11
100.0	250	8
102.0	261	4

ASCN NODE 245. W.

ADD MINS	AZ	EL
88.0	176	1
90.0	186	5
92.0	198	8
94.0	211	9
96.0	225	9
98.0	238	7
100.0	249	4
102.0	259	0

ASCN NODE 250. W.

ADD MINS	AZ	EL
88.0	178	1
90.0	188	4
92.0	201	6
94.0	213	7
96.0	226	6
98.0	238	3
100.0	248	0

ASCN NODE 255. W.

ADD MINS	AZ	EL
88.0	180	1
90.0	191	4
92.0	203	5
94.0	215	5
96.0	227	3
98.0	237	0

ASCN NODE 260. W.

ADD MINS	AZ	EL
88.0	182	1
90.0	193	3
92.0	205	3
94.0	217	2
96.0	227	0

ASCN NODE 265. W.

ADD MINS	AZ	EL
88.0	184	1
90.0	195	2
92.0	207	1
94.0	218	0

ASCN NODE 270. W.

ADD MINS	AZ	EL
86.0	175	0
88.0	186	1
90.0	197	1
92.0	208	0

ASCN NODE 275. W.

ADD MINS	AZ	EL
86.0	177	0
88.0	188	0
90.0	199	0

ASCN NODE 280. W.

ADD MINS	AZ	EL
86.0	179	0
88.0	190	0

ASCN NODE 285. W.

ADD MINS	AZ	EL
84.0	169	0
86.0	180	0

ASCN NODE 290. W.

ADD MINS	AZ	EL
82.0	160	0
84.0	171	1
86.0	182	0

ASCN NODE 295. W.

ADD MINS	AZ	EL
80.0	151	0
82.0	162	1
84.0	173	1
86.0	184	0

ASCN NODE 300. W.

ADD MINS	AZ	EL
78.0	141	1
80.0	152	2
82.0	164	2
84.0	175	2
86.0	186	0

ASCN NODE 305. W.

ADD MINS	AZ	EL
76.0	131	1
78.0	142	3
80.0	154	4
82.0	166	4
84.0	177	2

ASCN NODE 310. W.

ADD MINS	AZ	EL
74.0	121	1
76.0	131	4
78.0	143	6
80.0	156	6
82.0	168	4
84.0	179	2

ASCN NODE 315. W.

ADD MINS	AZ	EL
72.0	110	1
74.0	120	5
76.0	132	7
78.0	145	8
80.0	159	7
82.0	171	5
84.0	181	2

ASCN NODE 320. W.

ADD MINS	AZ	EL
70.0	99	1
72.0	108	5
74.0	120	9
76.0	133	11
78.0	148	11
80.0	162	9
82.0	174	6
84.0	184	2

ASCN NODE 325. W.

ADD MINS	AZ	EL
68.0	88	0
70.0	96	5
72.0	107	9
74.0	120	13
76.0	136	14
78.0	151	13
80.0	165	10
82.0	177	6
84.0	186	1

ASCN NODE 330. W.

ADD MINS	AZ	EL
68.0	84	4
70.0	93	9
72.0	106	14
74.0	121	18
76.0	139	18
78.0	155	16
80.0	169	11
82.0	180	6
84.0	188	1

ASCN NODE 335. W.

ADD MINS	AZ	EL
66.0	72	3
68.0	79	8
70.0	90	14
72.0	105	20
74.0	123	23
76.0	143	22
78.0	161	18
80.0	174	12
82.0	183	6
84.0	189	0

ASCN NODE 340. W.

ADD MINS	AZ	EL
64.0	61	0

KW E-ZEE MATCH, an efficient coupling unit of the Z match type for use from 80 to 10 metres over a wide impedance range. For use with balanced or coaxial feed lines at up to IKW PEP.

KW-107 SUPERMATCH, an all in one unit, combines an E-ZEE match, Antenna switch, Dummy Load and SWR/PWR meter for balanced or coaxial feeds. Wide impedance matching range at up to IKW PEP.

ALSO AVAILABLE:

KW-160, an "L" network coupler especially for 160M, can also be used right through 80 & 40 for single wire or co-ax feed. Similar size and appearance to the E-ZEE.

KW-109. Higher power version of the KW-107, same size but employing higher voltage condensers and heavier coils.

KW MULTIBAND antenna traps. Comprises two special trap coils, ceramic centre "T" insulator and instructions for a 108 ft. 80-10M dipole, using co-ax or twin 70 ohm feeder.

KW BALUN, ferrite 1 : 1 suitable for 50 or 70 ohms, lightweight and waterproof, has screw terminal connection.

KW-103 SWR/power meter, toroidal pick-up type for accuracy and reliability, 0-30 MHz. A quality unit.

KW DUMMY Load, air cooled, up to 1 KW, 0-70 MHz, 52 and 75 ohm.

KW ANTENNA Switch, 3 position co-ax switch with UHF type teflon connectors, usable up to 500 MHz, 1 KW PEP, cross-talk better than —80db.

KW-108 MONITORSCOPE, connects in antenna line for visually monitoring your transmission. Includes built-in two tone oscillator.

KW-2000E 160-10 M SSB transceiver, pair 6146 B P.A., superb construction, with matching A.C. P.S. and speaker unit.

KW-1000 80-10 M linear amplifier, uses pair of 572/T160L triodes in grounded grid circuit. Fan cooled, double screened P.A. Panel meter reads current, voltage and S.W.R.

Also available: Barlow-Wadley XCR-30 receiver, AM/FM digital clock radios; A comprehensive range of Hy-Gain, Newtronics, Cushcraft and Asahi antennas; SWR meters; Rotators; Morse Keys; Digital clocks, etc.; Plus, of course, the full range of Yaesu Musen transceivers, transmitters and receivers.

The items on this page are but a few from our large and still growing range of accessories. If the accessory you require is not shown on this page then call us or our agents, we're sure to have it.

ELECTRONIC SERVICES 60 Shannon St., Box Hill North, Vic., 3129. Ph. 89-2213

QLD. MITCHELL RADIO CO. 59 Albion Road, Albion, 4010. Ph. 57 6830
N.S.W. STEPHEN KUHL, P.O. Box 56, Mascot, 2020. Ph. Day 667 1650 A.H. 371 5445
S.A. FARMERS RADIO PTY. LTD., 257 Angas Street, Adelaide, 5000. Ph. 23 1268
W.A. H. R. PRIDE, 26 Lockhart Street, Como, 6152. Ph. 60 4379

VK2 WICEN and Broadcast zones

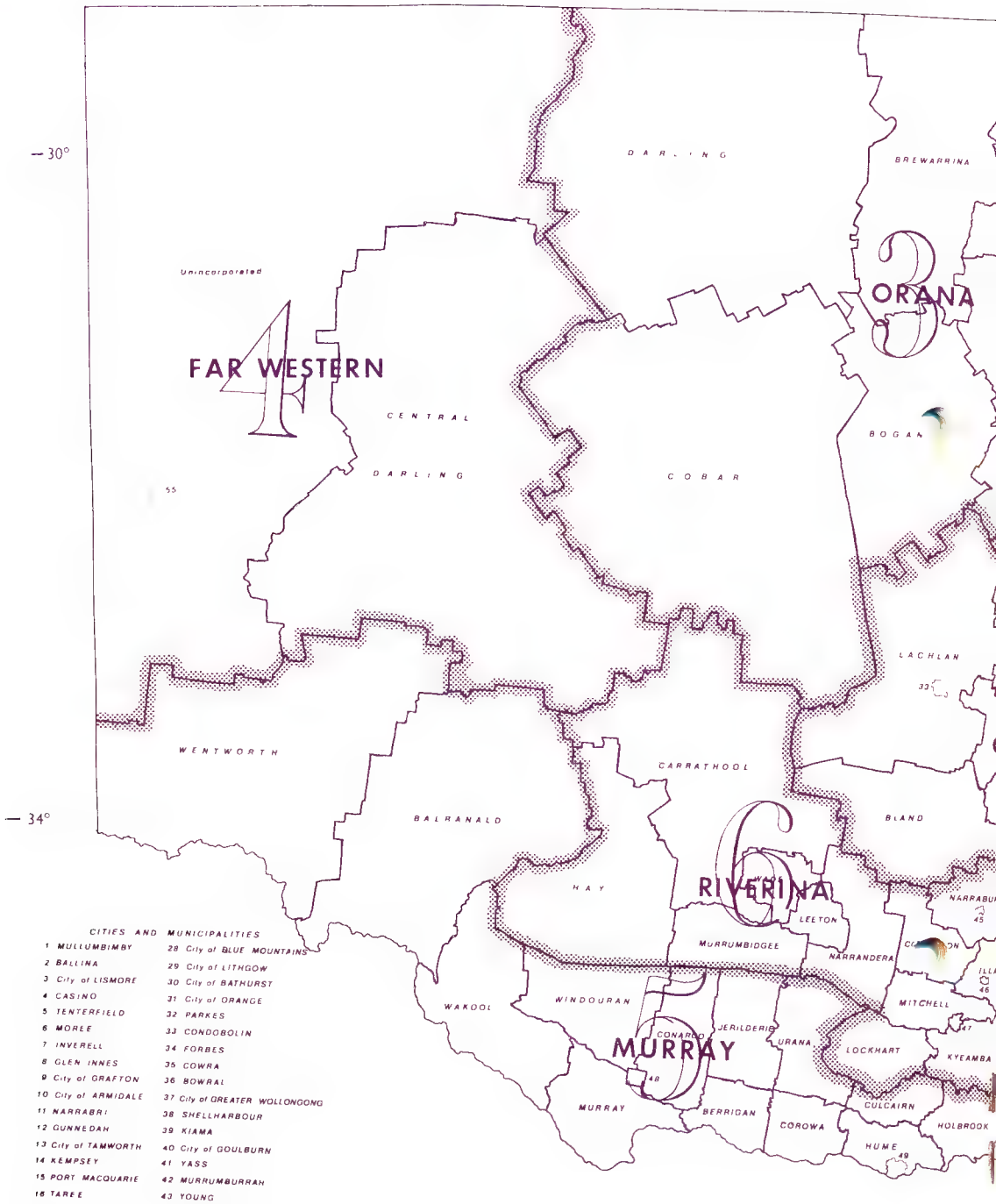

CITIES AND MUNICIPALITIES

1 MULLUMBIMBY
2 BALLINA
3 City of LISMORE
4 CASINO
5 TENTERFIELD
6 MOREE
7 INVERELL
8 GLEN INNES
9 City of GRAFTON
10 City of ARMIDALE
11 NARRABRI
12 GUNNEDAH
13 City of TAMWORTH
14 KEMPSEY
15 PORT MACQUARIE
16 TAREE
17 WINGHAM
18 QUIRINDI
19 ELIMINATED
20 NARROMINE
21 City of DUBBO
22 MUDGEE
23 MUSWELLBROOK
24 SINGLETON
25 City of MAITLAND
26 City of NEWCASTLE
27 City of GREATER CESSNOCK
28 City of BLUE MOUNTAINS
29 City of LITHGOW
30 City of BATHURST
31 City of ORANGE
32 PARKES
33 CONDOBOLIN
34 FORBES
35 COWRA
36 BOWRAL
37 City of GREATER WOLLONGONG
38 SHELLHARBOUR
39 KIAMA
40 City of GOULBURN
41 YASS
42 MURRUMBURRAH
43 YOUNG
44 COOTAMUNDRA
45 TEMORA
46 JUNEE
47 City of WAGGA WAGGA
48 DENILIQUIN
49 City of ALBURY
50 QUEANBEYAN
51 COOMA
52 BEGA
53 BOMBALA
54 GRENFELL
55 City of BROKEN HILL
56 ELIMINATED

REGIONS OF NEW SOUTH W

ADOPTED 6th July, 1971

(AS AMENDED, 1st MAY, 1972)

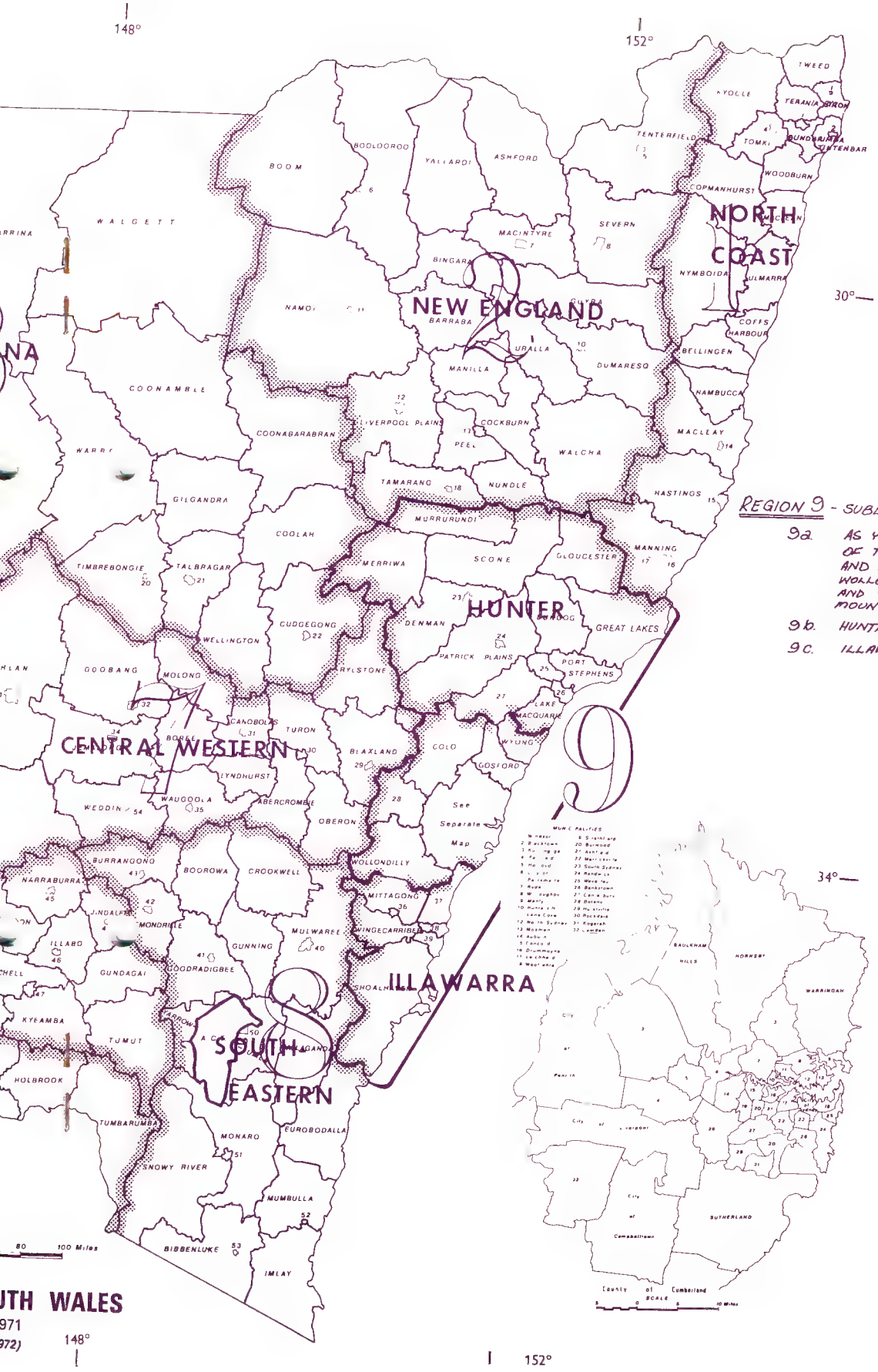

REGION 9 - SUBDIVIDED AS SHOWN

9a. AS YET UNNAMED - CONSISTS OF THE COUNTY OF CUMBERLAND AND SHIRES OF COLO; GOSFORD; WOLLONDILLY, AND WYONG AND THE CITY OF THE BLUE MOUNTAINS.

9b. HUNTER AREA

9c. ILLAWARRA AREA

UTH WALES
971
972)

(Continued from April, 1974)

SOUTH AUSTRALIA

VK5SD—R. S. Amos, 13 Kenwyn Drive, Campbelltown, 5074
5SF—M. H. Wood, 3 Wilson Street, Elizabeth Downs, 5113
5ZLO—L. F. Powning, 6 Oxford Street, Somerton Park, 5044
5ZMC—L. N. Coventry, 33 Creighton Avenue, Morphettvale, 5162

WESTERN AUSTRALIA

VK6ZCE—T. C. Bazen, 89 Thornlie Avenue, Thornlie, 6108

TASMANIA

VK7AF—J. E. Nicholson, Postal: Private Bag 200, Launceston, 7250; Station: "Marylands", East Tamar Highway, Launceston, 7250
7LW—L. W. W. Tacey, 39 Kaoota Road, Rose Bay, 7015
7OB—J. R. O'Brien, 37 New Town Road, New Town, 7008
7RW—R. M. McLennan, 14 Derwent Avenue, Lindisfarne, 7015
7ZAX—Dr. D. L. Mitchell, 8 Woolton Place, Sandy Bay, 7005
7ZMP—J. M. Powell-Davies, 30 Lanoma Street, Launceston, 7250

NORTHERN TERRITORY

VK8RR—R R. Hooper, Postal: PO Box 288, Darwin, 5794; Station: 3 Lambell Terrace, Darwin, 5794

CHANGE OF ADDRESS

VICTORIA

VK3BA—A. E. Bromeley, 54 Normanby Street, Cranbourne, 3917
3HS—G. Strachan, 409 Mt. Dandenong Road, Croydon, 3136
3NW—F. K. McTaggart, Change of Postal Address: 21 Ellsmore Avenue, Killara, N.S.W., 2071
3TG—E. L. Blackmore, 2 Willow Court, Kyabram, 3620
3AIQ—J. Glenn, "Surrey" Old Main Road, Ferny Creek, 3786
3AKT—M. K. Tulloch, Cnr. Dow and Bellar Aves., Irymple, 3498
3BCT—R. D. Trickett, 22 Waratah Street, Ascot Vale, 3032
3BGN—R. W. Rogers, 16 Merritt Ave., Werribee, 3030
3ZFK—F. Swainston, 11 Brownlow Court, Epping, 3076
3ZEH—A. C. Carreck, 20 Albert Road, Hallam, 3803
3ZIN—A. S. Wedgwood, Lot 5, Anzac Road, Warrandyte South, 3134
3ZOD—Schmidt, Callsign VK3ZOD **Not** VK3ZOO

QUEENSLAND

VK4EM—R. L. Reseck, 119 Kate Street, Indooroopilly, 4068
4WX—W. Wishart, Unit 10, Maila Court, 43 MacDonald Road, Margate, 4019
4ZDL/T—Rev. De Laver, 10 Church St., Boonah, 4310
4ZRJ—R. Harris, 82A Jubilee Terrace, Bardon, 4065
4ZSR—R. W. Rigg, 61 Surf Street, Mermaid Beach, 4218

SOUTH AUSTRALIA

VK5ZEW—P. J. Wilsen, 23 Marlborough Road, Westbourne Park, 5041
5QZ—J. A. Hackworth, 6 Tamar Crescent, Banksia Park, 5091
5ZTS—T. Scholten, F12/15 Wakefield Street, Kent Town, 5062
5WI—Wireless Institute of Australia, S.A. Division, VHF Group—6 Tamar Cres., Banksia Park, 5091

WESTERN AUSTRALIA

VK6EJ—E. J. R. Cowles, 11 Centaur Road, Bluff Point, 6530

TASMANIA

VK7SS—P. R. Tompson, 48 Cross Street, New Town, 7008

NORTHERN TERRITORY

VK8DA—Darwin Amateur Radio Club Inc., Postal: PO Box 1418, Darwin, 5794; Station: East Point Reserve, Darwin, 5794

CANCELLED STATIONS

VICTORIA

VK3DI—A. F. Meynderts. Not renewed
3JI—P. R. Gilbert. Not renewed.
3RT—R. A. Tozer. Not renewed.
3AFN—J. R. Nugent. Transferred to A.C.T.
3AHI—J. C. Eagon. Not renewed.
3AXB—J. Linden. Not renewed.
3RZZ—Wireless Institute of Australia, Vic. Division. Not renewed
3YEX—A. E. Fisher. Not renewed.
3YFG—D. W. Edwards. Not renewed
3ZEG—T. S. Gray. Not renewed
3ZET—R. J. Abell. Not renewed
3ZKR—J. M. Carter. Not renewed
3ZGZ—M. J. Howden. Not renewed
3ZNG—A. Boyle. Not renewed
3ZXA—D. L. Mitchell. Transferred to Tasmania
3ZXZ—M. Adlamd. Not renewed

QUEENSLAND

VK4EM—R. L. Reseck, 119 Kate Street, Indooroopilly, 4068 (shown November as VK4EN, incorrect)
4KH/T—K. F. Hoffman, 10 Duce Street, Toowoomba, 4350 (shown as VK4HK/T, incorrect)
4SH—S. T. Henkel, 32 Randall Road, Wynnum West, 4178 (deceased)
4ZHM—H. T. Moores, 6 Thomas Street, Wilston, 4051 (Now VK4IJ)
4ZIT—I. L. Tinney, 19 Fifth Avenue,, St. Lucia, 4067

WESTERN AUSTRALIA

VK6SO—J. Sollis. Non-payment renewal fee
6ZHI—P. A. Bradshaw. Non-payment renewal fee
6AF—RAAF Pearce-Amateur Radio Club. Ceased operations

MAY, 1974
NEW STATIONS

AUSTRALIAN CAPITAL TERRITORY

VK1YS—P. W. Bowers, 4 McCay Place, Pearce, 2607
1ZBE—N. C. Welstead, 21 Vogelsang Place, Flynn, 2615

NEW SOUTH WALES

VK2FI—B. L. Maguire, 5 Kimberley Road, Carlingford, 2118
2FQ—F. H. Hailstone, 18 Alan St., Seaforth, 2092
2NY—D. G. Hallam, 2 St. Johns Rd., Blaxland, 2774
2AJX—J. W. Wilmott, 6 Winchester Ave., Lindfield, 2070
2AKP—L. I. Howell, 17 Sherwin Avenue, Castle Hill, 2154
2ATJ/T—T. E. King, 5/59A Boronia St., Kensington, 2033
2BFF—D. C. Foster, 223 Clovelly Rd., Clovelly, 2031
2BFO—B. F. Orr, 8 Glenside St., Balgowlah, 2093
2BFP—B. E. Cloudesley, 7 Point St., Bateau Bay, 2262
2BZB—S. J. Blair, 17 Deborah Place, Eastwood, 2122
2BZC/T—P. B. Webster, 25 Bayview Avenue, Earlwood, 2206
2BZD/T—J. B. Webster, 25 Bayview Avenue, Earlwood, 2206
2BZE—M. S. Hort, 44 Strata Avenue, Barrack Heights, 2528
2YCC—K. A. Blow, "The Nook", Jacques Ave., Peakhurst, 2210
2YCE/T—C. J. Erwin, 5 Allawah Road, Pymble, 2073
2YCG—G. Archibald, 26 Benghazi Rd., Carlingford, 2118
2YCH—J. K. Gilin, 50 Barton St., Oak Flats, 2527
2YCI—B. Robertson Dunn, 182 Warringah Road, Beacon Hill, 2100
2YCL—C. G. Levitt, 18 Mooramba Ave., Lane Cove, 2066
2ZJP/T—J. H. The 2nd Powell, Flat 2/55A Carter Street, Cammeray, 2062
2ZNR, N. R. Tlefer, 191 Vimiera Rd., Eastwood, 2122
2ZPB—P. F. Bell, 2 Numantia Rd., Engadine, 2233
2ZVU/T—J. R. Trenning, 48 Chisholm Avenue, Avalon, 2107

VICTORIA

VK3IL—D. N. Baker, 30 Madden St., North Balwyn, 3104
3APA—F. R. Kent, Flat 17, 10/18 Minnie Street, Brunswick, 3056
3AWD—W. D. Melrose, 23 The Righi, East Ivanhoe, 3079
3YGE—R. A. Morrison, 7 North Gate, Werribee, 3030
3YJD—J. D. Smyth, 28 Clydesdale Street, Box Hill, 3128
3YKH—H. W. Kennedy, 787 Bell St., West Preston, 3072
3ZKQ—K. C. James, 27 Gordon Grove, East Preston, 3072
3ZLB—Ludewing, 4/3 Coleridge St., Elwood, 3184
3ZTC—H. E. K. Eames, 160 Wood St., Preston, 3072
3ZWJ—W. J. Mathews, Lot, 13, Browns Road, Devon Meadows, 3977

QUEENSLAND

VK4DK/T—C. W. Welsh, 21 Hart St., Mackay, 4740
4DT—D. T. Laurie, 5 Wanawong Court, Ferny Hills, 4055
4YU—K. Dillon, 6 Ceriman St., MacGregor, 4109
4ZE—M. J. Joyce, 35 Prout St., Camp Hill, 4152
4WIT—Townsville Amateur Radio Club, P.O. Box 964, Townsville, 4810 (See VK4TC below)

SOUTH AUSTRALIA

VK5EC—R. E. Taylor, 19 Easton Rd., Pt. Lincoln, 5606
5LI "Moonta May"—I. D. Campbell, Rossiter's Road, Moonta Bay, 5558
5PO—J. C. Crawford-Lindsay, 3 Rutherglen Ave., Valley View, 5093
5ZJM—J. F. Mott—Lot 31, Emmett Rd., Crafers, 5152
5ZIS—G. W. Schultz, 74 Shannon Ave., Glenelg North, 5045

WESTERN AUSTRALIA

VK6AQ—A. K. Maynard, Station: Lot 19 Oxford St., Albany, 6330; Postal: P.O. Box 153, Albany, 6330
6OC—O. C. Winterton, 42 Shakespeare Avenue, Yokine, 6060
6ZJA—C. W. James, 10 Traverse St., Wagin, 6315
6ZFM—T. J. Macha, 57 Bagot, Subiaco, 6008
6ZDT—S. W. Lawrence, Lot 24, Strettle Road, Mahogany Creek, 6072

TASMANIA

VK7KZ—R. J. Geeves, 33 Main Road, Moonah, 7009

NORTHERN TERRITORY

Nil

CHANGE OF ADDRESS

AUSTRALIAN CAPITAL TERRITORY

VK1AC—A. A. G. Parker, 10 Islander Cres., Flynn, 2615
1DB—D. A. R. Brown, 17 Grace St., Weetanger, 2614
1LF—L. B. Fisher, Flat 80, Burnie Court, 3 Burnie Street, Lyons, 2606
1ZMB—B. J. Mayfield, 32 Uriarra Forest, Uriarra, 2611
1ZPC—P. M. Cohn, 2/2 Burkett Street, Page, 2614
1ZQR—R. C. Qiocl, 8 Cooney Crt., Charnwood, 2615
1ZWG—W. R. Godley, 1 Gore St., Higgins; Postal, P.O. Box 31, Higgins, 2615

NEW SOUTH WALES

VK2BT—W. H. Kennedy, 818 Myamba Pde., Surfside North, Batemans Bay, 2363
2BX—B. G. Warren, 3 Glaisher Parade, Cronulla South, 2230
2FU—G. Pollock, 12 Edward Pde., Wentworth Falls, 2782
2GU—P. G. Arthurs, 52 Bungalow Rd., Peakhurst, 2210
2GP—G. T. Pile, 38 Mt. Ettalong Rd., Umina, 2257
2HU—N. H. T. Yuile, 42 Bighview Road, Pretty Beach, 2256
2IY—T. H. Cahill, 21 Georgina St., Bass Hill, 2197
2JP—S. B. Mason, 54 Vaux St., Cowra, 2794
2LD—R. L. Dickinsons, 36 Romford Rd., Frenchs Forest, 2086
2LX—H. C. Crisp, 18 Lett Street, Gorokan, 2263
2LZK—W. E. C. Bischoff, 37 Merrenburn Avenue, Naremburn, 2865
2MN—C. M. Croke, Back Creek Rd., Young, 2594
2OZ—J. R. Moyle, 572/50 Pennant Hills Road, Normanhurst, 2076

PERTH

ASCN NODE 0. W.

ADD MINS	AZ	EL
68.0	102	2
70.0	113	4
72.0	125	6
74.0	138	6
76.0	150	5
78.0	161	2

ASCN NODE 5. W.

ADD MINS	AZ	EL
66.0	90	3
68.0	101	6
70.0	113	9
72.0	127	10
74.0	141	10
76.0	154	7
78.0	165	4

ASCN NODE 10. W.

ADD MINS	AZ	EL
64.0	78	3
66.0	87	8
68.0	100	12
70.0	114	15
72.0	130	15
74.0	146	13
76.0	159	9
78.0	169	5
80.0	177	0

ASCN NODE 15. W.

ADD MINS	AZ	EL
62.0	66	2
64.0	73	8
66.0	84	13
68.0	99	18
70.0	116	21
72.0	135	20
74.0	152	16
76.0	164	11
78.0	174	5
80.0	181	0

ASCN NODE 20. W.

ADD MINS	AZ	EL
60.0	54	0
62.0	60	6
64.0	68	13
66.0	80	20
68.0	98	26
70.0	120	28
72.0	142	26
74.0	159	19
76.0	170	12
78.0	178	6
80.0	184	0

ASCN NODE 25. W.

ADD MINS	AZ	EL
60.0	47	4
62.0	53	11
64.0	61	19
66.0	75	28
68.0	97	36
70.0	127	37
72.0	152	31
74.0	167	21
76.0	177	13
78.0	183	6

ASCN NODE 30. W.

ADD MINS	AZ	EL
58.0	36	0
60.0	39	7
62.0	44	15
64.0	52	26
66.0	66	38
68.0	97	50
70.0	139	47
72.0	165	35
74.0	177	23
76.0	184	13
78.0	188	5

ASCN NODE 35. W.

ADD MINS	AZ	EL
58.0	28	3
60.0	30	10
62.0	33	20
64.0	38	32
66.0	52	50
68.0	100	68
70.0	163	55
72.0	181	36
74.0	187	22
76.0	190	12
78.0	192	4

ASCN NODE 40. W.

ADD MINS	AZ	EL
58.0	19	5
60.0	19	13
62.0	19	23
64.0	20	38
66.0	21	61
68.0	175	86
70.0	196	56
72.0	196	35
74.0	195	21
76.0	196	11
78.0	196	3

ASCN NODE 45. W.

ADD MINS	AZ	EL
58.0	10	6
60.0	8	14
62.0	4	25
64.0	357	40
66.0	336	60
68.0	259	68
70.0	220	48
72.0	209	30
74.0	204	18
76.0	202	9
78.0	199	2

ASCN NODE 50. W.

ADD MINS	AZ	EL
56.0	3	0
58.0	360	6
60.0	355	14
62.0	348	24
64.0	335	37
66.0	307	49
68.0	263	50
70.0	233	38
72.0	219	25
74.0	211	15
76.0	206	7
78.0	203	0

ASCN NODE 55. W.

ADD MINS	AZ	EL
58.0	350	6
60.0	343	13
62.0	334	21
64.0	318	31
66.0	293	37
68.0	263	36
70.0	240	29
72.0	225	20
74.0	216	12
76.0	210	5

ASCN NODE 60. W.

ADD MINS	AZ	EL
58.0	340	4
60.0	332	11
62.0	321	17
64.0	306	24
66.0	285	27
68.0	262	26
70.0	244	21
72.0	230	15
74.0	220	8
76.0	213	2

ASCN NODE 65. W.

ADD MINS	AZ	EL
58.0	332	3
60.0	323	8
62.0	311	13
64.0	297	17
66.0	279	19
68.0	252	18
70.0	246	15
72.0	233	10
74.0	223	5
76.0	216	0

ASCN NODE 70. W.

ADD MINS	AZ	EL
58.0	324	0
60.0	315	5
62.0	304	8
64.0	290	11
66.0	276	13
68.0	260	12
70.0	247	9
72.0	235	6
74.0	225	2

ASCN NODE 75. W.

ADD MINS	AZ	EL
60.0	308	1
62.0	297	4
64.0	285	6
66.0	272	7
68.0	259	7
70.0	247	5
72.0	236	2

ASCN NODE 80. W.

ADD MINS	AZ	EL
62.0	292	0
64.0	281	2
66.0	270	2
68.0	258	2
70.0	247	0

ASCN NODE 185. W.

ADD MINS	AZ	EL
104.0	104	1
106.0	93	1
108.0	82	1

ASCN NODE 190. W.

ADD MINS	AZ	EL
100.0	125	0
102.0	115	3
104.0	103	5
106.0	91	6
108.0	78	5
110.0	66	3
112.0	56	1

ASCN NODE 195. W.

ADD MINS	AZ	EL
98.0	136	0
100.0	126	4
102.0	115	7
104.0	102	10
106.0	88	11
108.0	74	10
110.0	60	8
112.0	49	4
114.0	46	0

ASCN NODE 200. W.

ADD MINS	AZ	EL
98.0	138	3
100.0	128	8
102.0	116	12
104.0	102	16
106.0	85	17
108.0	68	16
110.0	53	12
112.0	41	8
114.0	32	3

ASCN NODE 205. W.

ADD MINS	AZ	EL
96.0	147	0
98.0	140	6
100.0	131	12
102.0	118	18
104.0	101	23
106.0	81	25
108.0	60	23
110.0	44	17
112.0	32	11
114.0	24	5

ASCN NODE 210. W.

ADD MINS	AZ	EL
96.0	150	3
98.0	144	9
100.0	135	17
102.0	122	25
104.0	102	32
106.0	75	35
108.0	50	30
110.0	33	22
112.0	21	14
114.0	14	7
116.0	9	0

ASCN NODE 215. W.

ADD MINS	AZ	EL
96.0	153	5
98.0	148	13
100.0	141	22
102.0	128	33
104.0	103	44
106.0	65	47
108.0	34	37
110.0	18	25
112.0	9	15
114.0	4	7
116.0	0	1

ASCN NODE 220. W.

ADD MINS	AZ	EL
94.0	160	0
96.0	158	7
98.0	154	16
100.0	149	27
102.0	138	42
104.0	109	60
106.0	43	61
108.0	12	42
110.0	2	27
112.0	357	16
114.0	353	7
116.0	351	0

ASCN NODE 225. W.

ADD MINS	AZ	EL
94.0	163	2
96.0	162	9
98.0	161	18
100.0	160	31
102.0	157	50
104.0	148	78
106.0	354	68
108.0	347	42
110.0	345	26
112.0	344	15
114.0	343	6

ASCN NODE 230. W.

ADD MINS	AZ	EL
94.0	167	3
96.0	168	10
98.0	170	20
100.0	174	33
102.0	184	53
104.0	236	73
106.0	311	58
108.0	325	37
110.0	330	23
112.0	333	12
114.0	334	4

ASCN NODE 235. W.

ADD MINS	AZ	EL
94.0	171	4
96.0	174	11
98.0	179	21
100.0	188	33
102.0	209	48
104.0	254	55
106.0	293	44
108.0	310	30
110.0	318	18
112.0	323	9
114.0	326	2

ASCN NODE 240. W.

ADD MINS	AZ	EL
94.0	175	4
96.0	180	12
98.0	188	20
100.0	202	30
102.0	225	39
104.0	258	41
106.0	284	33
108.0	299	22
110.0	308	13
112.0	314	6

ASCN NODE 245. W.

ADD MINS	AZ	EL
94.0	179	5
96.0	186	11
98.0	197	19
100.0	212	26
102.0	234	31
104.0	259	29
106.0	278	23
108.0	292	16
110.0	301	9
112.0	307	2

ASCN NODE 250. W.

ADD MINS	AZ	EL
94.0	184	4
96.0	192	10
98.0	204	16
100.0	220	21
102.0	239	23
104.0	259	21
106.0	275	16
108.0	286	10
110.0	295	4

ASCN NODE 255. W.

ADD MINS	AZ	EL
94.0	188	4
96.0	198	9
98.0	210	13
100.0	226	16
102.0	242	17
104.0	258	14
106.0	271	10
108.0	282	5
110.0	290	0

ASCN NODE 260. W.

ADD MINS	AZ	EL
94.0	192	3
96.0	202	7
98.0	215	10
100.0	229	12
102.0	244	11
104.0	257	8
106.0	269	5
108.0	278	1

ASCN NODE 265. W.

ADD MINS	AZ	EL
94.0	196	2
96.0	207	5
98.0	219	7
100.0	232	7
102.0	245	6
104.0	256	4
106.0	266	0

ASCN NODE 270. W.

ADD MINS	AZ	EL
94.0	199	1
96.0	210	3
98.0	222	4
100.0	234	3
102.0	245	2

ASCN NODE 275. W.

ADD MINS	AZ	EL
96.0	213	0
98.0	224	1
100.0	235	0

ASCN NODE 350. W.

ADD MINS	AZ	EL
74.0	134	0
76.0	145	0

ASCN NODE 355. W.

ADD MINS	AZ	EL
70.0	113	0
72.0	124	2
74.0	135	1
76.0	147	2
78.0	158	1

ASCN NODE 360. W.

ADD MINS	AZ	EL
68.0	102	2
70.0	113	4
72.0	125	6
74.0	138	6
76.0	150	5
78.0	161	2

ASCN NODE 0. W.

ADD MINS	AZ	EL

ASCN NODE 0. W.

ADD MINS	AZ	EL

ASCN NODE 0. W.

ADD MINS	AZ	EL

BRISBANE

ASCN NODE 0. W.

ADD MINS	AZ	EL
56.0	25	1
58.0	26	8
60.0	28	17
62.0	32	29
64.0	41	47
66.0	75	69
68.0	160	63
70.0	181	41
72.0	187	26
74.0	190	15
76.0	192	6

ASCN NODE 5. W.

ADD MINS	AZ	EL
56.0	16	3
58.0	16	10
60.0	15	20
62.0	14	34
64.0	11	54
66.0	334	83
68.0	205	62
70.0	200	39
72.0	199	24
74.0	198	13
76.0	197	5

ASCN NODE 10. W.

ADD MINS	AZ	EL
56.0	7	4
58.0	5	12
60.0	1	21
62.0	353	35
64.0	335	52
66.0	281	64
68.0	232	50
70.0	215	33
72.0	208	20
74.0	204	11
76.0	201	3

ASCN NODE 15. W.

ADD MINS	AZ	EL
56.0	358	4
58.0	353	11
60.0	346	20
62.0	334	31
64.0	311	43
66.0	274	46
68.0	243	38
70.0	225	26
72.0	216	16
74.0	210	8
76.0	205	1

ASCN NODE 20. W.

ADD MINS	AZ	EL
56.0	348	3
58.0	342	10
60.0	333	18
62.0	319	26
64.0	297	32
66.0	271	33
68.0	248	28
70.0	232	20
72.0	221	12
74.0	214	5

ASCN NODE 25. W.

ADD MINS	AZ	EL
56.0	340	2
58.0	332	8
60.0	322	14
62.0	307	20
64.0	289	23
66.0	269	23
68.0	250	20
70.0	236	14
72.0	225	8
74.0	218	2

ASCN NODE 30. W.

ADD MINS	AZ	EL
56.0	331	0
58.0	323	5
60.0	312	10
62.0	299	14
64.0	283	16
66.0	267	16
68.0	252	13
70.0	239	9
72.0	228	4
74.0	220	0

ASCN NODE 35. W.

ADD MINS	AZ	EL
58.0	315	2
60.0	305	5
62.0	293	8
64.0	279	10
66.0	265	9
68.0	252	7
70.0	240	4
72.0	231	1

ASCN NODE 40. W.

ADD MINS	AZ	EL
60.0	299	1
62.0	288	3
64.0	276	4
66.0	264	4
68.0	252	3
70.0	241	0

ASCN NODE 45. W.

ADD MINS	AZ	EL
64.0	273	0

ASCN NODE 150. W.

ADD MINS	AZ	EL
104.0	110	2
106.0	99	3
108.0	87	4
110.0	75	3
112.0	64	1

ASCN NODE 155. W.

ADD MINS	AZ	EL
100.0	131	0
102.0	121	3
104.0	110	6
106.0	97	8
108.0	84	9
110.0	70	8
112.0	58	5
114.0	47	2

ASCN NODE 160. W.

ADD MINS	AZ	EL
100.0	133	3
102.0	123	8
104.0	111	12
106.0	96	14
108.0	80	15
110.0	64	13
112.0	51	10
114.0	40	5
116.0	31	1

ASCN NODE 165. W.

ADD MINS	AZ	EL
98.0	143	1
100.0	136	7
102.0	126	12
104.0	112	18
106.0	95	22
108.0	75	22
110.0	57	19
112.0	42	14
114.0	31	9
116.0	23	3

ASCN NODE 170. W.

ADD MINS	AZ	EL
98.0	147	4
100.0	140	10
102.0	130	18
104.0	115	25
106.0	94	31
108.0	68	31
110.0	46	26
112.0	31	19
114.0	21	11
116.0	14	4

ASCN NODE 175. W.

ADD MINS	AZ	EL
96.0	155	0
98.0	151	7
100.0	145	14
102.0	136	24
104.0	120	34
106.0	92	43
108.0	57	42
110.0	32	33
112.0	18	22
114.0	9	13
116.0	4	5

ASCN NODE 180. W.

ADD MINS	AZ	EL
96.0	158	2
98.0	156	9
100.0	152	18
102.0	145	30
104.0	130	45
106.0	91	60
108.0	35	54
110.0	12	37
112.0	2	23
114.0	357	13
116.0	354	5

ASCN NODE 185. W.

ADD MINS	AZ	EL
96.0	163	3
98.0	162	11
100.0	160	21
102.0	158	35
104.0	152	56
106.0	89	82
108.0	356	59
110.0	349	37
112.0	347	22
114.0	346	12
116.0	345	4

ASCN NODE 190. W.

ADD MINS	AZ	EL
96.0	167	5
98.0	168	13
100.0	170	23
102.0	175	38
104.0	189	59
106.0	270	74
108.0	320	52
110.0	329	33
112.0	333	20
114.0	335	10
116.0	336	3

ASCN NODE 195. W.

ADD MINS	AZ	EL
96.0	172	6
98.0	176	14
100.0	182	24
102.0	193	37
104.0	220	52
106.0	268	54
108.0	301	40
110.0	314	26
112.0	321	16
114.0	325	7
116.0	328	0

ASCN NODE 200. W.

ADD MINS	AZ	EL
94.0	174	0
96.0	178	8
98.0	183	14
100.0	193	23
102.0	208	33
104.0	235	40
106.0	267	39
108.0	290	30
110.0	304	20
112.0	312	11
114.0	317	8

ASCN NODE 205. W.

ADD MINS	AZ	EL
94.0	178	0
96.0	183	6
98.0	191	13
100.0	202	20
102.0	220	27
104.0	243	30
106.0	266	28
108.0	284	21
110.0	296	14
112.0	304	7
114.0	310	1

ASCN NODE 210. W.

ADD MINS	AZ	EL
94.0	182	0
96.0	188	6
98.0	198	11
100.0	210	17
102.0	227	21
104.0	246	22
106.0	265	19
108.0	279	14
110.0	290	8
112.0	298	3

ASCN NODE 215. W.

ADD MINS	AZ	EL
94.0	186	0
96.0	193	5
98.0	204	9
100.0	217	13
102.0	232	15
104.0	249	15
106.0	263	12
108.0	276	8
110.0	286	3

ASCN NODE 220. W.

ADD MINS	AZ	EL
96.0	198	3
98.0	209	7
100.0	222	9
102.0	236	10
104.0	250	9
106.0	262	7
108.0	273	3

ASCN NODE 225. W.

ADD MINS	AZ	EL
96.0	202	2
98.0	213	4
100.0	225	6
102.0	238	6
104.0	250	4
106.0	261	2

ASCN NODE 230. W.

ADD MINS	AZ	EL
96.0	206	0
98.0	216	1
100.0	228	2
102.0	239	1
104.0	250	0

ASCN NODE 320. W.

ADD MINS	AZ	EL
70.0	119	1
72.0	130	2
74.0	141	1
76.0	152	0

ASCN NODE 325. W.

ADD MINS	AZ	EL
66.0	97	1
68.0	108	3
70.0	120	5
72.0	132	5
74.0	144	4
76.0	156	2

ASCN NODE 330. W.

ADD MINS	AZ	EL
64.0	86	2
66.0	96	5
68.0	108	8
70.0	122	9
72.0	135	9
74.0	148	7
76.0	160	4
78.0	169	0

ASCN NODE 335. W.

ADD MINS	AZ	EL
62.0	74	2
64.0	83	6
66.0	94	11
68.0	109	14
70.0	124	15
72.0	140	13
74.0	153	10
76.0	164	5
78.0	173	0

ASCN NODE 340. W.

ADD MINS	AZ	EL
60.0	61	1
62.0	69	6
64.0	79	12
66.0	93	17
68.0	110	21
70.0	129	21
72.0	146	17
74.0	159	12
76.0	169	6
78.0	177	1

ASCN NODE 345. W.

ADD MINS	AZ	EL
60.0	56	5
62.0	63	12
64.0	74	19
66.0	91	25
68.0	113	29
70.0	136	27
72.0	154	21
74.0	166	14
76.0	175	7
78.0	181	1

ASCN NODE 350. W.

ADD MINS	AZ	EL
58.0	43	2
60.0	48	9
62.0	56	17
64.0	68	27
66.0	88	36
68.0	118	39
70.0	146	34
72.0	164	24
74.0	174	15
76.0	181	7
78.0	185	1

ASCN NODE 355. W.

ADD MINS	AZ	EL
58.0	35	6
60.0	39	14
62.0	46	24
64.0	58	36
66.0	85	50
68.0	130	52
70.0	161	39
72.0	175	26
74.0	182	15
76.0	186	7
78.0	189	0

ASCN NODE 360. W.

ADD MINS	AZ	EL
56.0	25	1
58.0	26	8
60.0	28	17
62.0	32	29
64.0	41	47
66.0	75	69
68.0	160	63
70.0	181	41
72.0	187	26
74.0	190	15
76.0	192	6

SYDNEY

ASCN NODE 0. W.

ADD MINS	AZ	EL
58.0	25	1
60.0	26	8
62.0	28	17
64.0	31	30
66.0	38	47
68.0	71	71
70.0	165	65
72.0	184	42
74.0	190	26
76.0	192	15
78.0	193	6

ASCN NODE 5. W.

ADD MINS	AZ	EL
58.0	17	3
60.0	16	10
62.0	15	20
64.0	13	33
66.0	9	54
68.0	330	82
70.0	209	62
72.0	202	39
74.0	200	24
76.0	198	13
78.0	198	5

ASCN NODE 10. W.

ADD MINS	AZ	EL
58.0	7	4
60.0	5	11
62.0	1	21
64.0	353	34
66.0	336	52
68.0	283	64
70.0	232	51
72.0	215	33
74.0	208	21
76.0	204	11
78.0	201	3

ASCN NODE 15. W.

ADD MINS	AZ	EL
58.0	358	4
60.0	354	11
62.0	347	20
64.0	335	31
66.0	312	43
68.0	275	47
70.0	242	39
72.0	224	27
74.0	215	17
76.0	209	9
78.0	208	2

ASCN NODE 20. W.

ADD MINS	AZ	EL
58.0	349	3
60.0	342	10
62.0	333	18
64.0	320	26
66.0	298	33
68.0	271	35
70.0	247	29
72.0	230	21
74.0	220	13
76.0	212	6
78.0	207	0

ASCN NODE 25. W.

ADD MINS	AZ	EL
58.0	340	2
60.0	332	8
62.0	322	14
64.0	308	20
66.0	290	25
68.0	268	25
70.0	249	21
72.0	234	15
74.0	223	9
76.0	215	3

ASCN NODE 30. W.

ADD MINS	AZ	EL
58.0	331	0
60.0	323	5
62.0	313	10
64.0	300	15
66.0	283	17
68.0	266	17
70.0	250	15
72.0	237	11
74.0	226	6
76.0	218	1

ASCN NODE 35. W.

ADD MINS	AZ	EL
60.0	315	2
62.0	305	6
64.0	293	9
66.0	279	11
68.0	264	11
70.0	250	9
72.0	238	6
74.0	228	2

ASCN NODE 40. W.

ADD MINS	AZ	EL
62.0	299	2
64.0	288	5
66.0	275	6
68.0	262	6
70.0	250	5
72.0	239	2

ASCN NODE 45. W.

ADD MINS	AZ	EL
64.0	283	0
66.0	272	1
68.0	261	1
70.0	249	0

ASCN NODE 150. W.

ADD MINS	AZ	EL
102.0	112	1
104.0	101	2
106.0	90	2
108.0	78	1

ASCN NODE 155. W.

ADD MINS	AZ	EL
100.0	123	2
102.0	112	5
104.0	100	6
106.0	87	7
108.0	74	5
110.0	63	3
112.0	52	0

ASCN NODE 160. W.

ADD MINS	AZ	EL
98.0	134	2
100.0	124	6
102.0	112	9
104.0	98	12
106.0	83	12
108.0	69	10
110.0	56	7
112.0	46	3

ASCN NODE 165. W.

ADD MINS	AZ	EL
96.0	144	0
98.0	136	5
100.0	126	10
102.0	113	15
104.0	97	18
106.0	79	18
108.0	62	16
110.0	48	12
112.0	38	7
114.0	29	1

ASCN NODE 170. W.

ADD MINS	AZ	EL
96.0	146	3
98.0	139	9
100.0	128	15
102.0	114	21
104.0	95	25
106.0	73	26
108.0	54	22
110.0	39	16
112.0	28	9
114.0	21	3

ASCN NODE 175. W.

ADD MINS	AZ	EL
96.0	149	5
98.0	142	12
100.0	132	20
102.0	117	29
104.0	93	35
106.0	65	35
108.0	42	28
110.0	27	20
112.0	18	12
114.0	11	5

ASCN NODE 180. W.

ADD MINS	AZ	EL
94.0	157	1
96.0	153	8
98.0	147	16
100.0	138	26
102.0	122	38
104.0	92	48
106.0	52	46
108.0	27	34
110.0	14	22
112.0	6	13
114.0	2	5

ASCN NODE 185. W.

ADD MINS	AZ	EL
94.0	160	2
96.0	157	10
98.0	153	19
100.0	147	31
102.0	133	49
104.0	89	65
106.0	27	56
108.0	7	37
110.0	359	23
112.0	355	13
114.0	352	5

ASCN NODE 190. W.

ADD MINS	AZ	EL
94.0	163	4
96.0	162	12
98.0	161	22
100.0	160	36
102.0	156	58
104.0	73	86
106.0	349	58
108.0	345	36
110.0	344	22
112.0	343	12
114.0	343	4

ASCN NODE 195. W.

ADD MINS	AZ	EL
94.0	167	5
96.0	168	13
98.0	171	24
100.0	176	39
102.0	192	60
104.0	272	72
106.0	317	50
108.0	327	32
110.0	330	19
112.0	332	10
114.0	334	2

ASCN NODE 200. W.

ADD MINS	AZ	EL
94.0	171	6
96.0	175	14
98.0	181	24
100.0	193	36
102.0	221	52
104.0	269	53
106.0	300	39
108.0	313	26
110.0	319	15
112.0	323	7
114.0	326	0

ASCN NODE 205. W.

ADD MINS	AZ	EL
92.0	172	0
94.0	176	7
96.0	181	14
98.0	191	24
100.0	207	34
102.0	235	41
104.0	267	39
106.0	290	29
108.0	302	19
110.0	310	11
112.0	315	4

ASCN NODE 210. W.

ADD MINS	AZ	EL
92.0	175	1
94.0	180	7
96.0	188	14
98.0	200	22
100.0	218	29
102.0	242	32
104.0	265	28
106.0	283	21
108.0	295	14
110.0	303	7
112.0	308	0

ASCN NODE 215. W.

ADD MINS	AZ	EL
92.0	178	1
94.0	185	7
96.0	194	13
98.0	207	19
100.0	225	23
102.0	245	23
104.0	264	20
106.0	278	14
108.0	289	8
110.0	297	3

ASCN NODE 220. W.

ADD MINS	AZ	EL
92.0	181	1
94.0	189	6
96.0	200	11
98.0	214	15
100.0	230	17
102.0	247	17
104.0	262	13
106.0	275	9
108.0	284	4

ASCN NODE 225. W.

ADD MINS	AZ	EL
92.0	184	1
94.0	193	5
96.0	205	9
98.0	218	12
100.0	233	12
102.0	248	11
104.0	261	8
106.0	271	4

ASCN NODE 230. W.

ADD MINS	AZ	EL
92.0	188	0
94.0	197	4
96.0	209	7
98.0	222	8
100.0	235	8
102.0	248	6
104.0	259	3
106.0	269	0

ASCN NODE 235. W.

ADD MINS	AZ	EL
92.0	191	0
94.0	201	2
96.0	212	4
98.0	224	5
100.0	237	4
102.0	248	2

ASCN NODE 240. W.

ADD MINS	AZ	EL
94.0	204	1
96.0	215	2
98.0	226	2
100.0	237	0

ASCN NODE 315. W.

ADD MINS	AZ	EL
72.0	121	0
74.0	132	2
76.0	143	2
78.0	155	1

ASCN NODE 320. W.

ADD MINS	AZ	EL
70.0	110	2
72.0	121	4
74.0	134	5
76.0	146	5
78.0	158	3
80.0	168	0

ASCN NODE 325. W.

ADD MINS	AZ	EL
68.0	99	3
70.0	110	6
72.0	123	8
74.0	136	9
76.0	149	7
78.0	161	4
80.0	171	1

ASCN NODE 330. W.

ADD MINS	AZ	EL
66.0	87	4
68.0	97	8
70.0	110	11
72.0	124	13
74.0	140	12
76.0	153	10
78.0	165	6
80.0	174	1

ASCN NODE 335. W.

ADD MINS	AZ	EL
64.0	74	3
66.0	83	8
68.0	95	13
70.0	110	17
72.0	127	18
74.0	144	16
76.0	158	12
78.0	170	7
80.0	178	2

ASCN NODE 340. W.

ADD MINS	AZ	EL
62.0	62	2
64.0	69	8
66.0	79	14
68.0	93	20
70.0	111	24
72.0	132	24
74.0	150	20
76.0	164	14
78.0	174	8
80.0	181	2

ASCN NODE 345. W.

ADD MINS	AZ	EL
60.0	50	0
62.0	56	6
64.0	63	13
66.0	74	21
68.0	91	28
70.0	114	32
72.0	139	30
74.0	158	23
76.0	171	15
78.0	179	8
80.0	185	2

ASCN NODE 350. W.

ADD MINS	AZ	EL
60.0	44	3
62.0	48	10
64.0	55	18
66.0	67	28
68.0	88	39
70.0	120	43
72.0	150	36
74.0	168	26
76.0	178	16
78.0	184	8
80.0	188	1

ASCN NODE 355. W.

ADD MINS	AZ	EL
60.0	36	6
62.0	39	14
64.0	45	24
66.0	56	38
68.0	83	53
70.0	133	55
72.0	166	41
74.0	179	27
76.0	185	16
78.0	189	7
80.0	191	0

ASCN NODE 360. W.

ADD MINS	AZ	EL
58.0	25	1
60.0	26	8
62.0	28	17
64.0	31	30
66.0	38	47
68.0	71	71
70.0	165	65
72.0	184	42
74.0	190	26
76.0	192	15
78.0	193	6

ASCN NODE 0. W.

ADD MINS	AZ	EL

ASCN NODE 0. W.

ADD MINS	AZ	EL

ASCN NODE 0. W.

ADD MINS	AZ	EL

MELBOURNE

ASCN NODE 0. W.

ADD MINS	AZ	EL
60.0	35	1
62.0	37	8
64.0	41	17
66.0	48	28
68.0	62	43
70.0	97	57
72.0	148	53
74.0	173	37
76.0	183	23
78.0	188	13
80.0	191	5

ASCN NODE 5. W.

ADD MINS	AZ	EL
60.0	27	3
62.0	28	11
64.0	30	20
66.0	33	34
68.0	43	54
70.0	101	75
72.0	175	58
74.0	188	37
76.0	192	22
78.0	194	12
80.0	194	4

ASCN NODE 10. W.

ADD MINS	AZ	EL
60.0	18	5
62.0	17	13
64.0	16	23
66.0	14	38
68.0	9	62
70.0	247	83
72.0	205	55
74.0	201	34
76.0	199	20
78.0	198	11
80.0	197	3

ASCN NODE 15. W.

ADD MINS	AZ	EL
60.0	[illegible]	6
62.0	5	14
64.0	1	24
66.0	352	39
68.0	329	58
70.0	263	64
72.0	224	46
74.0	212	30
76.0	206	18
78.0	203	[illegible]
80.0	200	2

ASCN NODE 20. W.

ADD MINS	AZ	EL
60.0	358	6
62.0	353	14
64.0	346	24
66.0	332	36
68.0	305	47
70.0	263	48
72.0	234	37
74.0	220	25
76.0	211	15
78.0	206	7
80.0	202	[illegible]

ASCN NODE 25. W.

ADD MINS	AZ	EL
60.0	348	5
62.0	342	13
64.0	332	21
66.0	316	30
68.0	292	36
70.0	263	36
72.0	240	29
74.0	225	20
76.0	216	12
78.0	209	5

ASCN NODE 30. W.

ADD MINS	AZ	EL
60.0	339	4
62.0	331	10
64.0	320	17
66.0	305	23
68.0	284	27
70.0	262	26
72.0	243	22
74.0	229	15
76.0	219	9
78.0	211	3

ASCN NODE 35. W.

ADD MINS	AZ	EL
60.0	330	2
62.0	322	8
64.0	311	13
66.0	296	17
68.0	279	20
70.0	260	19
72.0	244	16
74.0	231	11
76.0	221	5
78.0	213	0

ASCN NODE 40. W.

ADD MINS	AZ	EL
60.0	322	0
62.0	314	5
64.0	303	9
66.0	290	12
68.0	275	13
70.0	259	13
72.0	245	10
74.0	233	7
76.0	223	3

ASCN NODE 45. W.

ADD MINS	AZ	EL
62.0	307	1
64.0	296	5
66.0	284	7
68.0	271	8
70.0	258	8
72.0	245	6
74.0	234	3
76.0	224	0

ASCN NODE 50. W.

ADD MINS	AZ	EL
64.0	291	1
66.0	280	3
68.0	268	4
70.0	256	3
72.0	245	2
74.0	234	0

ASCN NODE 155. W.

ADD MINS	AZ	EL
102.0	107	1
104.0	96	1
106.0	85	0

ASCN NODE 160. W.

ADD MINS	AZ	EL
98.0	128	0
100.0	117	3
102.0	106	5
104.0	93	5
106.0	81	4
108.0	69	2
110.0	59	0

ASCN NODE 165. W.

ADD MINS	AZ	EL
96.0	138	0
98.0	128	4
100.0	117	7
102.0	104	9
104.0	90	10
106.0	76	9
108.0	64	6
110.0	53	3

ASCN NODE 170. W.

ADD MINS	AZ	EL
96.0	139	3
98.0	138	7
100.0	118	11
102.0	103	14
104.0	87	15
106.0	71	14
108.0	57	11
110.0	46	6
112.0	36	2

ASCN NODE 175. W.

ADD MINS	AZ	EL
94.0	148	0
96.0	141	5
98.0	134	11
100.0	119	17
102.0	102	21
104.0	83	22
106.0	64	20
108.0	49	15
110.0	37	10
112.0	28	4

ASCN NODE 180. W.

ADD MINS	AZ	EL
94.0	150	2
96.0	144	8
98.0	134	15
100.0	121	22
102.0	102	29
104.0	78	30
106.0	55	27
108.0	39	20
110.0	27	12
112.0	19	6
114.0	13	[illegible]

ASCN NODE 185. W.

ADD MINS	AZ	EL
94.0	153	4
96.0	147	11
98.0	139	20
100.0	125	29
102.0	102	38
104.0	70	41
106.0	43	34
108.0	26	24
110.0	16	15
112.0	9	7
114.0	5	0

ASCN NODE 190. W.

ADD MINS	AZ	EL
92.0	159	0
94.0	156	6
96.0	151	14
98.0	144	24
100.0	132	37
102.0	104	51
104.0	57	53
106.0	25	40
108.0	11	26
110.0	4	16
112.0	359	7
114.0	356	0

ASCN NODE 195. W.

ADD MINS	AZ	EL
92.0	161	1
94.0	159	8
96.0	157	17
98.0	152	29
100.0	144	46
102.0	116	67
104.0	27	64
106.0	2	43
108.0	355	27
110.0	351	15
112.0	349	7
114.0	348	0

ASCN NODE 200. W.

ADD MINS	AZ	EL
92.0	164	2
94.0	163	10
96.0	163	19
98.0	163	32
100.0	164	52
102.0	173	82
104.0	337	65
106.0	339	41
108.0	339	25
110.0	339	14
112.0	339	6

ASCN NODE 205. W.

ADD MINS	AZ	EL
92.0	166	3
94.0	168	11
96.0	170	21
98.0	176	34
100.0	190	53
102.0	246	69
104.0	305	54
106.0	320	35
108.0	326	21
110.0	329	11
112.0	330	4

ASCN NODE 210. W.

ADD MINS	AZ	EL
92.0	159	4
94.0	173	12
96.0	178	21
98.0	189	34
100.0	212	48
102.0	256	53
104.0	291	42
106.0	307	28
108.0	315	17
110.0	319	8
112.0	322	1

ASCN NODE 215. W.

ADD MINS	AZ	EL
92.0	173	5
94.0	178	12
96.0	187	21
98.0	201	31
100.0	226	40
102.0	258	40
104.0	283	31
106.0	297	21
108.0	306	12
110.0	311	5

ASCN NODE 220. W.

ADD MINS	AZ	EL
92.0	176	5
94.0	184	12
96.0	194	20
98.0	211	27
100.0	234	31
102.0	258	29
104.0	277	23
106.0	290	15
108.0	299	8
110.0	304	2

ASCN NODE 225. W.

ADD MINS	AZ	EL
90.0	174	0
92.0	180	6
94.0	189	12
96.0	201	18
98.0	218	23
100.0	238	24
102.0	258	21
104.0	273	16
106.0	284	10
108.0	293	4

ASCN NODE 230. W.

ADD MINS	AZ	EL
90.0	176	4
92.0	184	5
94.0	194	11
96.0	207	15
98.0	223	18
100.0	241	18
102.0	257	15
104.0	270	10
106.0	280	5
108.0	287	[illegible]

ASCN NODE 235. W.

ADD MINS	AZ	EL
90.0	179	0
92.0	187	5
94.0	198	9
96.0	214	12
98.0	227	14
100.0	242	13
102.0	256	10
104.0	267	6
106.0	276	1

ASCN NODE 240. W.

ADD MINS	AZ	EL
90.0	181	0
92.0	191	4
94.0	202	8
96.0	215	9
98.0	229	10
100.0	243	8
102.0	255	5
104.0	264	1

ASCN NODE 245. W.

ADD MINS	AZ	EL
90.0	184	0
92.0	194	3
94.0	205	6
96.0	218	7
98.0	231	6
100.0	243	4
102.0	253	1

ASCN NODE 250. W.

ADD MINS	AZ	EL
90.0	196	0
92.0	197	2
94.0	208	4
96.0	220	4
98.0	232	3
100.0	242	0

ASCN NODE 255. W.

ADD MINS	AZ	EL
92.0	199	1
94.0	210	2
96.0	222	1

ASCN NODE 260. W.

ADD MINS	AZ	EL
92.0	201	0

ASCN NODE 310. W.

ADD MINS	AZ	EL
78.0	147	0
80.0	158	[illegible]

ASCN NODE 315. W.

ADD MINS	AZ	EL
74.0	126	0
76.0	137	2
78.0	148	2
80.0	160	2
82.0	171	0

ASCN NODE 320. W.

ADD MINS	AZ	EL
72.0	116	1
74.0	126	3
76.0	138	5
78.0	151	4
80.0	162	3
82.0	173	0

ASCN NODE 325. W.

ADD MINS	AZ	EL
70.0	105	2
72.0	115	5
74.0	127	7
76.0	141	8
78.0	154	7
80.0	165	4
82.0	176	1

ASCN NODE 330. W.

ADD MINS	AZ	EL
68.0	93	2
70.0	103	6
72.0	115	9
74.0	129	11
76.0	143	11
78.0	157	9
80.0	169	5
82.0	178	1

ASCN NODE 335. W.

ADD MINS	AZ	EL
66.0	81	1
68.0	90	6
70.0	102	11
72.0	116	14
74.0	131	15
76.0	147	14
78.0	161	10
80.0	172	6
82.0	181	1

ASCN NODE 340. W.

ADD MINS	AZ	EL
64.0	70	0
66.0	77	6
68.0	87	11
70.0	100	16
72.0	117	20
74.0	135	20
76.0	152	17
78.0	166	12
80.0	176	6
82.0	184	1

ASCN NODE 345. W.

ADD MINS	AZ	EL
64.0	64	4
66.0	72	10
68.0	83	17
70.0	99	23
72.0	119	26
74.0	141	25
76.0	158	20
78.0	171	13
80.0	180	7
82.0	186	1

ASCN NODE 350. W.

ADD MINS	AZ	EL
62.0	53	2
64.0	58	8
66.0	66	16
68.0	78	24
70.0	98	31
72.0	124	34
74.0	149	30
76.0	166	22
78.0	177	14
80.0	184	6
82.0	189	0

ASCN NODE 355. W.

ADD MINS	AZ	EL
62.0	45	5
64.0	50	12
66.0	58	22
68.0	72	32
70.0	97	42
72.0	132	43
74.0	159	34
76.0	174	23
78.0	183	14
80.0	188	6

ASCN NODE 360. W.

ADD MINS	AZ	EL
60.0	35	1
62.0	37	8
64.0	41	17
66.0	48	28
68.0	62	43
70.0	97	57
72.0	148	53
74.0	173	37
76.0	183	23
78.0	188	13
80.0	191	5

ASCN NODE 0. W.

ADD MINS	AZ	EL

ASCN NODE 0. W.

ADD MINS	AZ	EL

ASCN NODE 0. W.

ADD MINS	AZ	EL

ASCN NODE 0. W.

ADD MINS	AZ	EL

Single Sideband Transceiver KW2000E

for Mobile and Fixed Station operation on all amateur bands 10-160metres

The New KW2000E transceiver incorporates a number of improvements over previous models the most important being, improved cross modulation performance, a 500 KHz VFO with greater stability and full amateur band coverage from 1.8 MHz to 30 MHz as standard.

Features include:—

Top Band with switch to legal limit. Reliable 6146's in PA. Break in CW. Complete 10 M coverage 28.0 MHz to 30.0 MHz. New RF stage and 1st RX Mixer. Smooth 2 speed slow motion drive to VFO. 6 Band operation. Lift up inspection lid. Vox built in. USB or LSB on any band. ALC provides high "Talk power". Matching AC power supply with built in speaker. Sidetone monitor for CW. Crystal controlled receiver 1st mixer. 100 KHz crystal calibrator. Nominal 2.4 KHz mechanical filter provides optimum bandwidth for SSB transmission and reception. No external antenna switching required. WWV/RKM/JYE signal standards on 15 MHz. Independent transmit and receive frequencies or true transceive operation. 180 watts PEP input provides effective mobile power whilst not over-taxing the car battery. Lightweight, attractive, robust, efficient. Only best quality components are used resulting in utmost reliability. Easy to install in a vehicle for mobile operation. 12 Volt DC Transistor power supply available.

A limited quantity of this world famous British-built transceiver from KW-DECCA LTD., UK, is now available ex Melbourne Stock.
PRICE, with A.C. P.S., $675 incl. Sales Tax — 12 V DC Power optional extra.
A matching linear amplifier KW-1000 also available. This incorporates two 572 B triodes, and is compatible with other HF transceivers. Please write for full Technical Data.
Australian Agents:—

bai ELECTRONIC SERVICES 60 Shannon St., Box Hill North, Vic., 3129. Ph. 89-2213

QLD.: MITCHELL RADIO CO., 89 Albion Road, Albion, 4010 Ph. 57 6830
N.S.W.: STEPHEN KUHL, P.O. Box 56, Mascot, 2020 Ph. Day 667 1650 A.H.: 371 5445
S.A.: FARMERS RADIO PTY. LTD., 257 Angas Street, Adelaide, 5000. Ph. 23 1268
W.A.: H. R. PRIDE, 26 Lockhart Street, Como, 6152. Ph. 60 4379

BRIGHT STAR CRYSTALS

- **PROMPT DELIVERY GUARANTEED**
- **ALL TYPES OF MOUNTINGS**

Such as HC6/U (style D) . . . HC18/U (style J) . . . HC25/U (style K) . . . etc. . . . Frequency range up to 140MHz on 5th overtone.

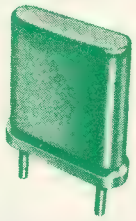

- **ACCURACY**
- **STABILITY**
- **ACTIVITY**
- **OUTPUT**

Our increased production now enables us to offer Special Discounts from 10%
Let us quote you for all your Crystal requirements.
Our easy-to-read Price List is now available.

BRIGHT STAR CRYSTALS PTY. LTD.

35 EILEEN ROAD, CLAYTON, VIC., 3168. Phone: 546-5076 (Area Code 03).

INTERSTATE AGENTS:

Sydney: PARIS RADIO ELECTRONICS, 7a Burton Street, Darlinghurst, N.S.W. 2010, Phone: 31-3273.
Perth: W. J. MONCRIEFF PTY. LTD., 176 Wiftenoon Street, East Perth,, 6000, Phone: 25-5722, 25-5902.
Brisbane: FRED HOE & SONS PTY. LTD., 246 Evans Road, Salisbury North, 4107, Phone: 47-4311
Adelaide: ROGERS ELECTRONICS, P.O. Box 3, Modbury North, S. A. 5092. Phone: 64-3296.

ANTENNA COMPONENTS

INSULATORS:
High Quality brown glazed egg insulators medium size **50 cents**
High Quality brown glazed long leakage path end insulators **50 cents**

WIRE:
Hard Drawn 14 Gauge Copper Antenna Wire (much less expansion than soft drawn wires) **9c/mtre**

TRANSMISSION CABLES:

Co-Axial Cable			
UR60	52 ohm	80 cents/metre	+ 15% S.T.
UR70	72 ,,	35 ,,	,, ,, ,, ,,
RG58AU	50 ,,	35 ,,	,, ,, ,, ,,
PT11M	71 ,,	40 ,,	,, ,, ,, ,,
Twin Flat Line			
K20	75 ohm	20 ,,	,, ,, ,, ,,

TRAPS:
G8KW Antenna Trap Kits comprised of two matched and tuned weatherproofed coils and centre ceramic "T" insulator **$22.50 Nett**

AIR WOUND INDUCTANCES:
Full range of air wound inductances in diameters of ½", ⅝", ¾", 1" and 1¼" wound 8 and 16 turns-per-inch; 2" diameter wound 10 and 12 turns-per-inch.
Write for special data sheet and prices.

PLEASE INCLUDE FREIGHT WITH ORDERS

WILLIAM WILLIS & CO.
PTY. LTD
Manufacturers and Importers
77 CANTERBURY RD., CANTERBURY
VIC. 3126 Phone 836-0707

KENWOOD

QR-666

the ALL-band

COMMUNICATIONS RECEIVER

that gives you the world and an FM option, too.

All-band/all-mode reception on frequencies 170 kHz to 30 mHz covered by 6 bands. Receives broadcasts in any mode AM, SSB, CW or FM—with the optional accessory QR6-FM. Super sensitivity from dual gate MOS types FET's, double signal selectivity and AGC characteristics. IF circuit with mechanical and ceramic filters designed for high selectivity, resistance to interference; single button selection of wide band (5 kHz/6dB) or narrow band 2.5 kHz/6dB). Altogether a high performance compact, smartly styled unit of advanced design at a suggested 'Today' price of $296.60.

—Mail coupon NOW!—

Weston Electronics Company
215 North Rocks Rd., North Rocks, N.S.W. 2151 Phone 630-7400

Please send details of the Kenwood QR-666

NAME.....
ADDRESS.....
.....POSTCODE.....

FERGUSON

Manufacturers of: Electrical / electronic equipment, wound components and lighting control equipment.

BRANCHES IN ALL STATES

Ferguson Transformers Pty Ltd.

Head Office
331 High Street, Chatswood
NSW 2067

PO Box 301 Chatswood,
NSW. Australia 2067

Phone: 02-407-0261

What are we doing to ourselves

Peter B. Dodd, VK3CIF
1306 Glenhuntly Road, Glenhuntly, 3163

In between the sweeping generalities in this article, there is a great amount of truth viewed against our 'popular' identity, the performance at ITU conferences of many delegates from African and other countries and the dark clouds of a world frequency conference hanging over us for 1979. Perhaps the Eastern bloc countries are quite right in classifying amateur radio as a sporting activity. (Ed.)

Quite frankly, I am heartily sick and tired of all the preaching going on within the amateur service to justify to ourselves that amateur radio is a good thing. But more, later.

Do you hear footy requiring justification for its existence? Or table tennis? Or chess? Or stamp collecting? Or flying model aircraft? There is public acceptance of these activities as essential parts of everyday existence.

"And what are your interests, Joe?" "Reading, football and going to the beach in summer". "Very good Joe — what else occupies your time apart from work and sleep, don't you bet for instance?" "Oh, yes, I have a dollar a week on Tatts and follow the dogs a bit whilst having a drink with my mates down at the pub".

You see my point? First rate things like reading, watching footy and such like. Then down to the fringe-area things like betting and a drink or two.

Listening to the radio or watching the monster are other socially acceptable activities.

But mention amateur radio and what is the response?

Either it is an unknown activity or you are asked in a derogatory way about being 'one of those hams'. Kindly folk ask what is a ham and what does he do? Perhaps the word 'ham' did us more harm in the public relations field than everything else put together including interference to favourite programmes.

Have you never faced a supercilious enquiry about being 'one of those hams'. "Oh yes", you say, "and I gave him a really expert run down on amateur radio which he won't forget in a hurry". "Did you — good on yer mate". Like to take a bet on his reaction to your good intentioned preaching? Did you hear him later in the week talking to his friends about meeting some ham bloke — "must have been a real nut-case the way he shoved the stuff down my throat".

In the public's mind is amateur radio an activity rated below the fringe area even?

If it is — why?

I'll tell you.

We have fallen down badly with our public relations work. Not merely lately but most of the time. Are we so wrapped in our hobby, so self-centred or so introverted that we have not time to publicise ourselves. What are we? A mob of rabbits for ever burrowing underground instead of shouting our excellence from the roof tops? We claim to talk to the world but where do we hide publicity to the ordinary man in the street?

What does the public know — or care — about the OSCAR programme? Did officialdom see to it that amateurs received no mention for their part in the recent Queensland floods? What could a good journalist have done with amateur communications for Las Balsas and countless other out of the ordinary occurrences?

Things that are happening now! Not the stale old stuff about pioneering 200 metres and below. Or the vital part played long ago by amateurs in communications by wireless. All this is good stuff but forget it once it is in written history.

OSCAR statellites, moonbounce and other scientific experiments, day to day communications going on with an interesting background. These and numerous variations on such themes should regularly appear in the press, be heard on radio and be seen on television. But for sure, ban that word 'ham'. It has lost any value it once had. It is no longer funny — just as Tony Hancock's "It's raining in Tokyo" is dated. Incidentally, the use of 'that word' is to be discouraged on no less an authority than through a policy of the WIA Federal Council.

What are we doing for the young? What are we doing for beginners? What will we be doing for Novices? Are we so smug and so elite, so privileged, so know-it-all that we have no patience with anyone aspiring to climb the ladder below us?

What are we missing in the schools? It might be too much to expect amateur radio to be an examination subject but apart from a few dedicated individuals manning the occasional YRCS activity or a 'big deal' once a year appearance by a few people on JOTA what are we doing for the young?

Hit and miss methods hopefully believing that an occasional teacher in equally few schools will fire up enough enthusiasm even to inform students about amateur radio are no longer good enough. Every school ought to know something about Oscar satellites and how easy it is to climb on this bandwagon of exciting experimentation to broaden the pupils' knowledge of the world around him (and her, too).

No, we go around hiding our talents. Because we are 'amateurs'? Is the word 'amateur' as great a millstone round our necks as the word 'ham'? Everyone must have heard the expression 'he came up from the world of amateurs'.

I submit we must do a big job on our public relations, our beneficial effects and our potential value to the community. And this applies to you, and you and you over there as well as to WIA activated publicity constantly flooding the media until they sit up and take notice of us.

All this is very different from sitting supine in your operating chair hoping the other bloke will do something; reading in our amateur magazines about the benefits of amateur radio and how can we stave off disaster by convincing ourselves we are, after all, splendid blokes full of knowledge and world-wide bonhomie; what the great 'we' have done and hope to do.

Amateur radio is not a secret society. The activity is not allied to black magic, witchcraft or any other little known fad or occult art. Sure, we have some mystic language but this is necessary fun, part of the game. We talk openly, even with Russians, but we are not communist spies as an article in the "Sun" of 18th March seemed to imply from a British Defence Council Report.

This article is intended to stir every right-thinking amateur into doing something about our public image. Not only now, not only next week, not only next year BUT ALL THE TIME, mate. Despite our increasing numbers we do not get more frequencies. Without frequencies on which to operate where would we be? Back to growing roses perhaps! ●

QSP

EMERGENCY COMMUNICATIONS

"It is expected that AMSAT-OSCAR 7 will be used in support of such (emergencies) communications during any such emergencies, as a back-up for HF radio, which is highly dependent upon favourable ionospheric conditions". Amsat Newsletter, Sept. '74.

heading north in 75?

Why not time your visit to coincide with the second bi-ennial North Queensland Convention to be held by the Townsville Amateur Radio Club?

Place:

TOWNSVILLE — City in the Sun

Time:

26/27 JULY, 1975

Essential Equipment:

(1) Mobile HF gear to join in the TARC nets while travelling to Townsville.

(2) Mobile VHF gear for use in the city.

(3) Homebrew items for entry in the competition.

(YL/XYL section also, not necessarily electronic.)

Registration details in 'AR' early 75.

●

What to do with that old receiver

By Harry Roach
Reprint from Zero Beat, April 1970

That old radio that Uncle Bob gave you, what can you do with it? Ever thought of making a Signal Tracer out of it? This is how you do it. If it is a superhet type, you can make it do at least 5 things.

1. **A signal generator.**
2. **An RF probe tracer.**
3. **Detector output of set is used to apply to any amplifier.**
4. **Use the set's audio output for testing other gear or as a PU amp or can be used with hi-level output microphone.**
5. **Lo-level output.**

You will need a switch with 5 positions. 2 x 100pf mica condensers. 3 x .05 condensers (Philips polyester) value not critical. Use at least 400v working type. Quantity of coax. (75 ohm or microphone cable) PMG jack and plug and a home made probe (out of a ball point pen shaft).

By connecting a 100pf condenser to the oscillator section of the tuning gang, you pick up the RF generated by the local oscillator of the set. This should be good until at least the third harmonic (see table) and if you use a list of broadcast stations you can work out what generated frequency you are on or what harmonic. This is very handy as a rough check on your short wave receiver, or for lining up.

Make a probe out of a ball point shaft. Plug one end with some insulating material and insert a knitting needle or a bodkin. Solder your coax. to this and the other end of the coax. goes to a PMG jack plug.

Don't forget to earth the shielding. When the S/W is in the No. 2 position you can use this probe to pick up RF signals on another receiver. If you have trouble in the RF section of a set, use the probe by tracing a signal until you get nothing and then you start looking at that particular section for trouble.

The aerial is disconnected from the tracer whilst tests are being made with the exception of the No. 3 position.

Dial Tuning	Osc. Tuning	2nd H'monic	3rd H'monic
550 KC	1005 KC	2010 KC	3015 KC
3AR (620)	1075 ,,	2150 ,,	3225 ,,
3LO (770)	1225 ,,	2450 ,,	3675 ,,
3AW (1280)	1735 ,,	3470 ,,	5205 ,,
3AK (1500)	1955 ,,	3910 ,,	5865 ,,

(with set using 455 KC I/Fs)

I realise that there will be many types of superhet about and the types of valves will vary enormously, but the principal is the same throughout. In this diagram the first valve is the Mixer, the second is the IF amp, the third is AVC DET. and 1st Audio, and the last valve is the Output amplifier. The rectifier is not shown.

When making connections to the switch place the condenser as near as you can to the component or element and the length of shielded cable is then earthed near that point and the rest of the cable run to and joined at the switch. A length of about two feet joined to a crocodile clip makes up the earth lead and this can be soldered or just plugged into the chassis.

If you like this idea and give it a go and find it successful you can later on make a more sophisticated tracer by using most of the equipment again but altering some of the coils and switches. Try this first. The main thing in getting this going, is to get a copy of the circuit of the receiver (if you can) or get some friend to help out with where to put the connections on. It looks a bit hard, but it really isn't.

BELOW: A standard circuit for pre-solid state broadcast receivers.

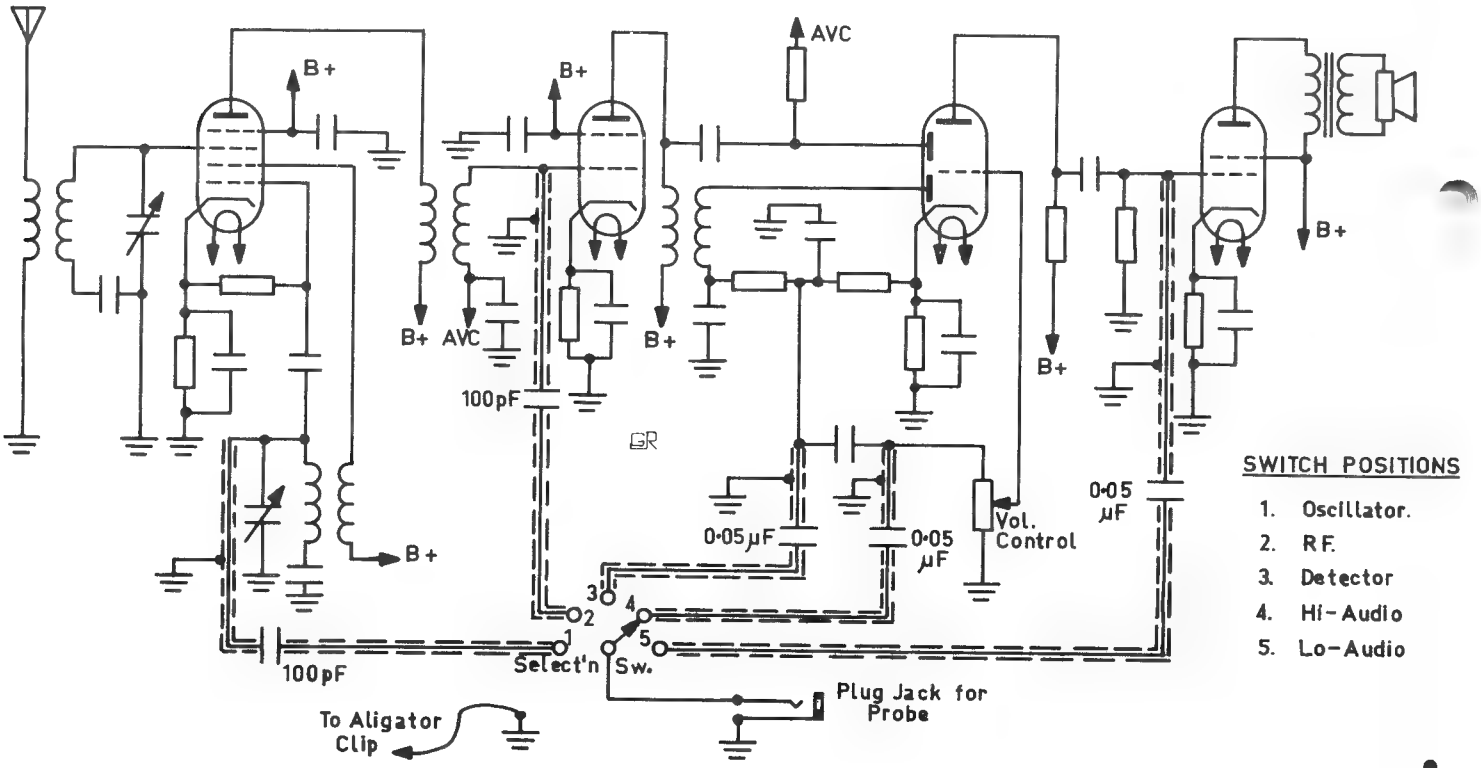

Commercial Kinks

with Ron Fisher VK3OM
3 Fairview Ave., Glen Waverley, 3150

FT101 VOX OPERATION

It's now quite a while since we discussed the FT101. Perhaps it is indicative of the reliability of these rigs that very little is ever heard of serious problems or the need for odd modifications. To start with, in this present discussion we will look at the adjustment of the VOX circuits. Earl Lagergren K70EP, DL4LE and VK2EP devised the following and Les VK4LZ forwarded it on to me.

"Recently I had the pleasure of visiting with Les VK4LZ, and came across the following problem with his **FT101.** Since this appears to be a common problem and prevents many fellows from using the VOX, I thought I would pass along my experiences with it. Les's VOX would operate satisfactorily for a few minutes and then slowly hang-up.

Looking at the VOX schematic on page 17 of the instruction manual, you will see that the VOX relay is controlled by a bipolar transistor (Q6) which will operate the relay as soon as the base voltage increases above about 0.7 volt. The base voltage is controlled by the action of a junction FET (Q5) in the following manner: with no inputs from either the VOX or anti-trip circuitry, the voltage on the gate of Q5 will be zero. With zero gate voltage the drain voltage of Q5 and therefore the base voltage of Q6 will be a factor of the drain load resistance R25, the particular FET characteristics and the source bias determined by the value of VR3.

Let us assume the source bias pot VR3 RELAY is adjusted so that the quiescent drain voltage is 0.4 volt. Any speech from the mike will be amplified by the VOX amplifier and rectified by D1 and D2. The gate voltage will no longer be zero, and as it goes in the negative direction the drain voltage will become more positive. As soon as the drain voltage increases from 0.4 to 0.7 the VOX relay will be activated. With no further speech input this voltage will fall back to 0.4 volt and somewhere along the way the rig will switch back to receive.

This is the problem; if the base voltage as adjusted by VR3 RELAY is too close to the turn-on voltage of Q6, then any slight drift may cause the transceiver to hang-up in transmit. However, if the RELAY pot is adjusted too far in the other extreme, too much VOX gain will be required and the VOX may not operate on the first syllable.

The best method of adjustment is as follows: with the receiver audio gain turned down speak into the mike and turn the VR3 RELAY pot fully counter-clockwise. This should cause the rig to hang-up in transmit. Now slowly turn the pot clockwise until the relay drops out and then turn it a fraction more to take any drift into account. Now advance the VOX gain pot VR1 until the VOX actuates on the first syllable. Turn up the receiver audio gain, tune in a strong signal, and advance the anti-trip pot VR5 until the relay stops chattering. It might be necessary to play with these two pots a bit. However, it is much better to keep the mike and speaker separated and use only a little anti-VOX than to put the mike right in front of the speaker and need too much anti-VOX."

IMPROVED CW OPERATION FOR THE FT101B

Tom House VK2BTH makes a simple suggestion for CW operators lucky enough to own an **FT101B.**

"Owners of the popular Yaesu **FT101B** transceiver who like both CW and SSB will probably have noticed that unless the microphone is unplugged when operating in the CW mode, the VOX tends to cycle on and off. A simple remedy is, on switching to CW, to turn the mic gain fully clockwise (maximum). A perusal of the circuit diagram shows that this effectively shorts to earth the output of the mic stage to the VOX amplifier when the unit is receiving. It allows the microphone to be left permanently in place, thus avoiding much tiresome and time-consuming pulling and tugging."

Remember, when reverting to SSB, to return the mic gain to its normal position. ■

FOR SALE

52 MHz 144 MHz 432 MHz Swan Yagi Antennas in Kit Form used by many 144 MHz Moon Bounce operators in USA. Also large quantity aluminium tubing.

Write
"ANTENNAS"
Box 80, Birchip, Vic. 3483

Try This

with Ron Cook VK3AFW
and Bill Rice VK3ABP

KP202 RF POWER AMPLIFIER

A power amplifier is useful when using the KEN KP202 as a mobile or base. This is best done by using an RF switched power amplifier between the KEN KP202 and the antenna.

The amplifier unit consists of a relay driven by an RF Sensor and uses a 10 W class C transistor RF power amplifier. The RF power amplifier is a 10 watt RF Power Kit (Dick Smith Electronics) which uses a 2N5590 transistor. If higher output is desired a 25 W board could be added on also.

The changeover relay is actuated by detecting the RF from the KEN, and using this to drive the relay via a DC amplifier. The relay used was a small cradle relay with low capacitance and high current contacts. Suitable relays may be obtained from Siemens and other sources.

The amplifier was simply peaked up for output and produced 9 watts output for 12 volt supply and 1.5 watts drive. But 14 volts supply and 1.5 watts drive produced 12 watts output, so keep the battery volts up.

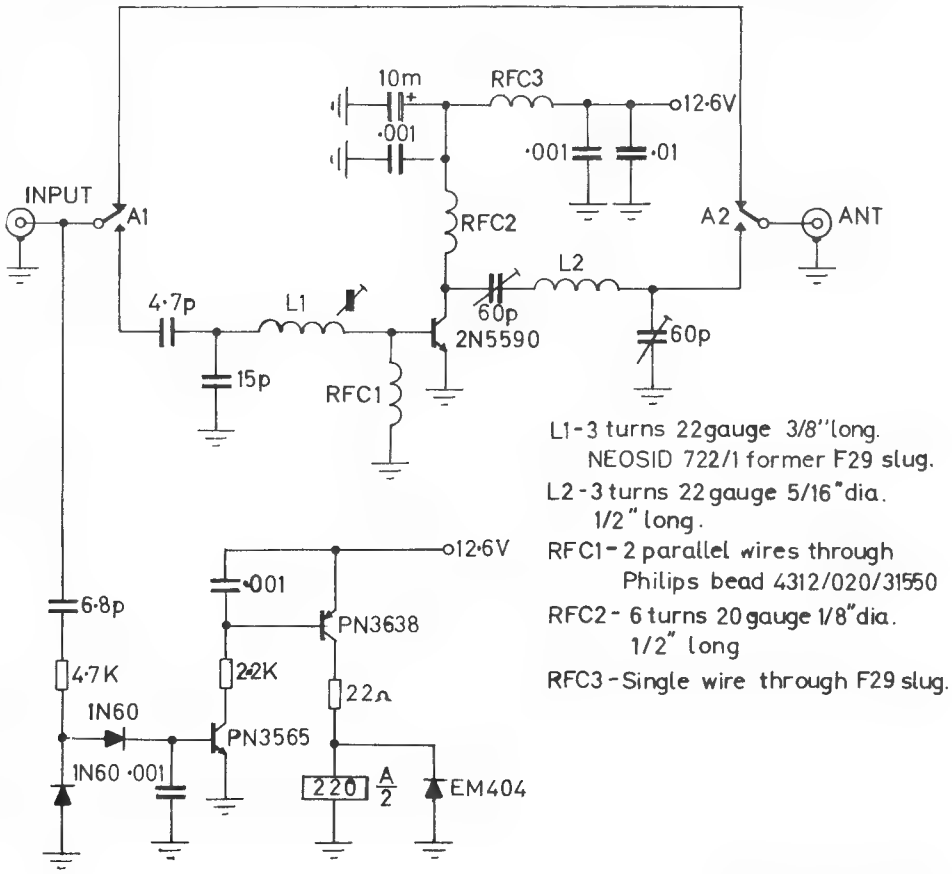

Newcomers Notebook

with Rodney Champness VK3UG

44 Rathmullen Rd., Boronia, Vic. 3155

This month I have a few more short circuits from Zero Beat.

JUNE 1969 HARRY SMITH VK3ZXS. An ordinary, cheap, glass cutter (disc roller type) makes an excellent tool for cutting aluminium sheet. Some care must be taken to score both sides opposite each other then flex until it breaks at the score. In most cases, and especially if the sheet is large, it pays to clamp the aluminium between two pieces of timber of appropriate size. Try putting one end in the vice and fix the other with a G clamp, or use two clamps.

JUNE 1969. Correcting fluid designed to cover mistakes in typed mimeographed stencils can also be used for repair of small tears and holes in speaker cones. The solution is inexpensive and can be purchased in small bottles from any of the office supply stores.

AUGUST 1969. Winding coils with enamelled wire and having trouble cleaning the ends for soldering? Then try this. Heat the area you want to strip in a methylated spirit flame. A small jar with screw lid with a wick through a tight hole in the top will do as a burner. When it is red hot dip it into some cold methylated spirit and you have a perfectly cleaned wire.

AUGUST 1969. After applying decals (transfers) to a panel, cabinet, etc., fix them to ensure their permanency. Use a small camel hair brush to apply a small amount of acetone fingernail polish remover, or lacquer thinner to the decal. Use just enough solvent to dissolve the clear decal backing.

APRIL 1970. Where there is not much room to work, replacement transistors will be easier to insert if the leads are staggered, that is cut each lead a little shorter than the other. This allows you to insert only one lead at a time instead of trying to manoeuvre three leads through three holes all at once. The excess length can be cut off after the leads have been soldered.

APRIL 1970. One neat and simple method of providing taps on hand wound coils is to make a loop in the wire and twist it two or three times. Continue on with the coil to the end and cut the loop on one side near the twist, clean the twist and solder. The piece of wire in the loop gives you your tapped lead. ●

QSP

HF MARKER STATIONS

Radio telephony weather broadcasts radiate from the Sydney area on 3432, 6680 and 10017 kHz at each hour and 30 minutes past each hour. The broadcasts on 3432 and 6680 are good markers to determine whether 80 m and 40 m bands are open from your QTH to VK2, especially the Sydney area.

Letters to the Editor

Any opinion expressed under this heading is the individual opinion of the writer and does not necessarily coincide with that of the Publishers.

The Editor,
Dear Sir,

Brian Hannan's letter in September issue has spurred me to write about the problems of the associate member in the WIA. I cannot but agree that associate members do receive a raw deal — at least in Victoria. Some three to four years ago a delegation from the Eastern Zone at a special Divisional Council meeting brought up this very point, and the additional point that associates have no voting rights even in matters which affect them only.

The membership fee which now stands at 97 per cent of full membership fee is unjust considering the reduced privileges the associate receives. They have no voting rights on any subjects, their WIA listeners numbers are not published, there are few articles in AR which are of value to them, I'm not sure but I think they pay to the IARU, they pay for part of the Federal conventions at which their affairs are not discussed, and they have no need of the help of the TVI committee or to receive assistance in dealing with "problem" neighbours. It was with these things in mind that the Eastern Zone broached this subject. The Eastern Zone was told that it cost just as much to administer an associate as a full member and that there could be no consideration of associates having any voting rights even on subjects that only concerned them. The inference was more fool the associates for belonging to the WIA. Regretably, I have no reason to believe that the Victorian Divisional Council have changed their minds on the importance of the associate in the whole scheme of amateur radio.

I believe that a membership fee of 70 per cent or thereabouts would be reasonable for an associate to pay, for what they should get out of the WIA and for what they should put into the WIA. It cannot be just a one way affair. For example, on investigation it appears that the listeners numbers were dropped from the callbook because they were inaccurate either through the WIA records of this nature assuming a low priority, or the associates did not advise the WIA of changes of address and such like. Why don't the people who are interested in this listing get together and make sure that the listings are accurate and up to date. Perhaps an approach could be made to the Editor of AR to determine whether each Division could submit an insert for each State of the listener numbers, names and addresses in much the same way as the callsign amendments are done. The system I envisage would be that VK5 would only receive the VK5 list of listeners, likewise VK3 only the VK3 listeners and so on.

I coudn't agree more that the content of AR directed towards associate members is relatively small. However, Newcomers Notebook is aimed at the associate and the newly licensed amateur. Regretably very little feedback is received to determine whether or not this column is filling this need. I have appealed from time to time for help with the column and have been deafened by the silence of people speaking up and offering. I have very little time to prepare articles — a co-author for this segment of the magazine would be most desirable. I cannot recall when I last saw an article written by an associate. It is difficult for a licensed amateur to write for people with significantly different interests to his. The associate member must contribute more to the magazine, not just bemoan the fact that there is very little to interest him in AR. The SWL notes died a natural death through lack of contributions by the associate members.

Perhaps the whole outlook of the WIA executive, divisional councils, rank and file amateurs and the associate members should change concerning what role the associate plays in the WIA. The associate grading should be the way in which a radio enthusiast is introduced to amateur radio. I believe that the person we are aiming to attract to the broad spectrum of amateur radio knows nothing of it — because of lack of publicity on our part. These people of whom we know nothing would join as associates and a large proportion would likely become amateurs. We need good publicity followed up by good educational courses in amateur radio. These two aspects will be most important when and if the Novice certificate comes in. Quite a proportion of the 27 MHz pirates might not have been pirates if we had had some publicity in the World at large, and courses of instruction to help them on the way to amateur radio. I estimate that there are more pirates than licensed amateurs. Wouldn't it be good if most had become amateurs instead of pirates? Have we lost these people because of our "closed house" attitudes, I say in many cases we have.

To recapitulate (1) The associate member has my support for a lowering of fees in his case, and I am sure other full members would too. In each case contact sympathetic amateurs in your own states so that this point can be put forward. If you don't contact full members you cannot expect their help.

(2) I believe that associates should have voting rights but only on those things which directly concern them.

(3) Associates themselves need to push for the re-insertion of the listener numbers.

(4) Associates need to contribute more to AR if they want a fair coverage of items of interest to them.

(5) The WIA in total needs to look carefully into the role of the associate as it is and what it should be.

(6) The WIA needs to publicize amateur radio much more widely than it does currently, and perhaps steer young people who might go pirating on the road to amateur radio.

(7) The WIA needs more and better instructional courses for radio/electronics enthusiasts. Perhaps the Government could be persuaded that these types of courses should be subsidised under the free tertiary education scheme.

(8) These particular points become increasingly important with the possibility of Novice licensing.

Think these points over whether you be a full or associate member. The time for change is perhaps already upon us. Rodney Champness, VK3UG

The Editor,
Dear Sir,

I was intrigued with the problem raised in the letter to the Editor of AR, July 1974, by VK6TU, and have given a few thoughts to it.

I have not seen the reference quoted from the "Radio Communication Handbook", hence I do not know as to what type of valve or circuit conditions to which it applies.

The statement is correct in relation to a type 813 beam power valve used under class C conditions with a very stable independent screen grid power supply. This was verified in a practical test with an 813. When tuning the plate circuit through resonance, the plate current dip and the screen grid current peak occurred together.

The reference that in the amplifier no grid current was flowing, indicates that the 6146s were being used in either class A or class AB1, and probably they are parallel connected. No reference to the type of drive being used was made, i.e. grid or cathode drive.

The 6146 is a little different in one respect from other beam power valves, it has a rather low screen grid impedance and it is this which makes screen grid modulation slightly more difficult than with, say, an 807, for AM.

I have extracted the following data for a pair of 6146s from a valve manufacturer's data sheet for class AB1 operation under ICAS conditions.

Plate Voltage: 750 V.

Screen Voltage: 200 V. Preferably obtained from a very stable power supply, either independent or extra well regulated.

Control grid Voltage: 50 V. Again preferably from a well regulated supply. Cathode bias is **not** recommended.

Plate current: Zero signal input. 57 mA, maximum signal input 227 mA.

Screen grid current: Zero signal input. 7 mA, maximum signal input 27.5 mA.

Power Output: 120 watts.

Assuming that the 6146 behaves as stated in the handbook, the problem may be due to any of the following:

Screen grid voltage not sufficiently stable. This is vitally important as variations in screen grid voltage have more effect on plate current than

variations of plate voltage. (More so than in a tetrode.)

Screen grid current supply from power supply insufficient, i.e. the power supply voltage may be reasonably stable even if the power supply cannot provide sufficient current.

Control grid bias not sufficiently stable.

Use of cathode bias. (Cathode drive systems can introduce unsuspected cathode bias because of the ohmic nature of the drive circuits.)

Control grid resistance is excessive. If used, suggest a change to RF choke.

Use of paralleled valves. It may happen that unity power factor does not occur at resonance. Quite common with paralleled triodes.

Output loading not tight enough.

Trust that these notes may help in solving the problem.

Chris Cullinan, VK3AXU

The Editor,
Dear Sir,

I noted with interest the listing of top scores for the 1973 CQ WW WPX Contest (P.20 AR, August 1974).

It may be of some interest to you that I was successful in obtaining "second world high" in that contest as single operator on 21 MHz with a score of 343, 826 points, operating as VK9RY (P29RJ since self government).

Perhaps of equal interest (and I trust encouragement) to would-be contest participants is the fact that throughout the contest my final PEP to the antenna never exceeded 200 watts. The antenna is a "home brew" 6 element monoband Yagi with a 34 ft. boom and (believe it or not) for the past five years has been rotated unerringly by a Stolle Rotator!

The same combination was used on 21 MHz for the 1973 VK-ZL Contest.

Ron Johns
P29RJ/ex VK9RY/ex VK1RJ
MWIA and foundation member of Radio Society of Papua

The Editor,
Dear Sir,

I would like to say that I am in agreement with Brian J. Hannan's letter which was published in AR for September 1974.

I cannot see why Associate members should pay $17.50 a year to join the WIA which, as Mr. Hannan stated, is only 50c less than a full member. The associate member (as far as I can see) does not have a say as to how the money the WIA gets is spent, and is unable to vote on any matters that will affect him when he obtains his Amateur Licence. Neither can he get a concession on a ham band or general coverage receiver as do full members if they import a transceiver into the country.

There must be several associate members that are more interested in the listening side of amateur radio. That is, sending reports to amateurs and receiving QSL cards, and through no fault of their own, are not able to study to become an Amateur.

There must be also a number of associate members apart from those sending QSL cards to amateurs, who enjoy reading AR, and have to join the WIA to obtain it, as it is not available through book shops or newsagents.

The only advantage I can see that associate members get from the WIA is the non-postage on QSL cards. I am not running the WIA down, as they do a good job for the fully licensed Amateur.

The same thing happens in NZ where the associate member pays 50c less than the "transmitting" member. Although both have to pay 1c per card to be sent through the NZART Bureau they also have no voting rights similar to the associate member in Australia.

73 Barrie Boyce L3-425

(Licensed Amateurs in Australia are also unable to obtain concessions on receiver imports. The matter is still being pressed. — Ed.)

The Editor,
Dear Sir,
Rising Prices.

I have for some time tried to wage a private war against rising prices of items offered for sale to Amateurs. This was made possible by a number of devices and the fact that I considered this matter a leisure activity to make available certain products to Amateurs whose workshops lacked metalworking facilities.

It is now necessary to report that this policy cannot be continued indefinitely and new prices, about 1/3rd higher will have to be charged as soon as presently available stocks (four only) of Quad kits and other items are sold.

The need for this action is regretted but, with rapidly rising prices for raw materials of all types, it is impossible for me to maintain prices at present levels.

Syd Clark, VK3ASC

Magazine Index

With Syd Clark, VK3ASC

[illegible]

Ideas for Building Transceivers, Galbraith Counter; Electronic A.R.T.

CQ May 1974

Serrana Bank Saatu; The RME Success Story; Another Approach to Lightweight Yagi Construction, Determining Resonant Lengths of Transmission Lines, Cop's Column (Now it is ISB SSTV on one and voice on the other)

HAM RADIO May 1974

Log-Periodic for 15 and 20, Parabolic Antenna Design, Antennas and Satellite Communications, Antenna Ground Systems; Antenna Measurements, Three Band DX Vertical, 160 Metre Receiving Antenna; 5/8-Wavelength VHF Antennas, Antenna Tuner; Vertical Radiation Patterns, Pi Network Design.

HAM RADIO June 1974

Cosmos Electronic Keyer; Better Receiver Design, Function Generator, Coherent FSK RTTY, Two-Metre Pre-amplifier, Optimum Height for Horizontal Antennas, Local Oscillator Waveform Effects; Understanding Spectrum Analysers, Private Line for the Heathkit HW-202; Dipole Beams.

RADIO COMMUNICATION June 1974

Some Interesting Uses for TAA861 Integrated Circuits, The Heathkit HW202 2M FM Transceiver (Review); Some Thoughts on True Break-in for CW and SSB; Building Blocks for the Novice.

BREAK-IN July 1974

Ideas for Building Transceivers, NZART Conference Report.

RADIO COMMUNICATION July 1974

The "Normal-Mode" Helical Aerial; A Digital Frequency Display Unit; Building Blocks for the Novice.

SHORT-WAVE MAGAZINE June 1974

Modifying the FR-50; Microphone Pre-Amplifier; Third Method SSB Exciter, Paraboloid for Twenty-Three.

QST July 1974

A Character Generator for ATV, Learning to Work with Semiconductors, EME Scheduling, When and Where, A Fence Mount for Vertical Antennas, The Elco 753 Rides Again, More Receiver Design Notes, Part 2; A Poor Man's Electronic Tower Hoist; Heathkit HW-202, Spectronics DD-1 Digital Display, Inoue IC-230, Wind Force on a Yagi Antenna.

73 MAGAZINE June 1973

Poor Man's Quad, Reconditioning the Long Squared Quad, Antenna Wind Indicator; Matching; Remotely Tuned Antenna Coupler, A Practical Ground System for 160, Wide Range Antenna Tuner; Old Antennas and New Baluns, A multi-band Ground Plane, Mod Quad for Frustrated Cliff Dwellers.

New Products

Information is to hand on a new range of five multi-voltage, general purpose, power transformers from Ferguson.

Two of the transformers have two independent 0-12-15 Volt windings while the other three have either two 0-28-32.5 or two 0-28-35 volt windings.

Outputs from 3 to 70 volts and to 10 amps are available using different arrangements. The 15 volt units are available in 75 VA (2.5 A max per winding) and 120 VA (4 A) while the 35 volt units come in 105 VA (1.5 A), 210 VA (3 A) and 350 VA (5 A).

All except the 120 VA unit are fitted with electrostatic screens and all comply with A.S. C 128.

The sample provided was up to spec, well constructed and quiet.

This range should prove most versatile and useful for the amateur.

Intruder Watch

with Alf Chandler VK3LC

1536 High Street, Glen Iris, 3146

This month I have a grouch. I am getting far too few reports of Intruders.

This is not because Intruders are not in our bands, but because most Members are apathetic towards reporting them.

That is a very bad show!!

One ray of sunshine has emerged though. On 14160 kHz daily, except Sundays, from about 9 a.m. until 10 a.m. Melbourne time, VK3UE controls a net in which many stations participate, either momentarily or prolonged, and he has agreed that any Member who has heard an Intruder and wishes to pass on the news can call in on the net and, either he or myself can take the particulars. This is a great step forward, and I have already had several interesting reports.

Also, another method which I am pursuing, and one that takes the onus off Members writing out reports on the forms supplied, is for Members to telephone me. My number is 50 2556 in Melbourne, but please do not ring after 9 p.m. in the evening. When you hear an Intruder just take a note of the following: Date and time GMT, Frequency; Mode; Signal strength; Call Sign (if identified), any traffic heard, and if possible the bearing ex your QTH. Also, on first reporting, I shall require your type of receiver and its IF frequency, and an indication whether you mind me mentioning your Call sign, because I shall wish to sign the form as for yourself per mail.

In Brisbane Murray VK4KX phone No. 36 5385; in Perth Ross VK6DA No. 24 2508, in Adelaide Leith VK5LG No. 278 4724, will take any calls that you wish to make.

Some members seem to think it futile to report Intruders. This is far from the truth, and it is to the credit of the WIA Intruder Watch that some stations have been removed from our bands. A notable example is KJG who, by the RTTY read-out submitted by a Member Observer, was reported to RSGB who in turn prevailed upon the Yugo-Slav Government through the British Administration and had that station removed.

I may be a little premature, but it is some time since the Indonesian stations 7BD2 etc. on 14060 kHz have been heard. Don't for a moment think that Amateur frequencies are the only ones occupied by Intruders. I have been supplied with a page from the document RR692 — "The Board (IFRB) shall prepare periodically, for publication by the Secretary General, summaries of the useful monitoring data received by it including a list of the stations contributing the data". This double sided page which is pages 297 and 298 covers from 13802 to 14385 kHz, and is full of intruding stations mostly only identified by country.

An interesting feature is that those identified have similar Call signs to those heard in our bands by Amateur Observers. So you see the necessity and the advantage of reporting those insidious Intruders.

Stations reported August through September are as follows —

[illegible]

21313	A1	FUJ — calling FAAQ with weather report in French.
14040	A1	— calling JPB — stopped when QRMed.
14046	A1	HAV — Vs. High speed CW
14078	A1	— 5 figure code.
14111	F1	— RTTY
14128	A1	— Letter and figure code.
14131	A1	VLKH — calling 3NIH.
14133	A1	VLIU — Vs and QRO, QRZ.
14150	A1	DNOQ — calling OUNC. 4 letter groups.
14152	F1	— RTTY, 100 baud, 500 shift.
14182	A1	— Letter and figure code.
14184	F1	— RTTY, 500 shift.
14240	A1	OQZB
14253	A3	— Foreign broadcast.
14328	F1	— RTTY, 500 shift.
14334	A1	MNYK — calling 53NI
3815	A3	— Foreign broadcast.
3843	A1	AAQJ — calling ODBX.
3845	A1	— 4 figure code.

Contests

with Jim Payne, VK3AZT
Federal Contest Manager,
Box 67, East Melbourne, Vic., 3002

1974 REMEMBRANCE DAY CONTEST RESULTS

	a	b	c	d	e	f
VK5 & 8	289	837	34.5	1485	71944	26325
VK4/P29	132	775	17	1945	49049	10299
VK6	77	525	14.6	1444	29152	5719
VK1	35	130	26.9	1056	11203	4072
VK2	109	2151	5.1	1522	34524	3271
VK7 & 0	42	231	18.1	706	12003	2888
VK3	89	2054	4.3	1046	30555	2370

a—Logs received
b—Licences
c—Logs/Licences %
d—Average top 6 logs
e—Total score
f—Trophy score

CONGRATULATIONS TO THE VK5 & 8 participants.

Their joint effort was well organised and the roneoed cover sheets received with most of their logs made my job much easier. Column "c" of the results shows the call areas where prior organisation might wrest the trophy from VK5. But pity the contest manager, for this time there were 809 logs received and over 200 of them arrived during the two days before entries closed.

Unfortunately a few logs contained less than the minimum 5 contacts and consequently could not be recorded. Several misread the scoring table and claimed highly inflated scores; quite a number failed to double scores for CW contacts, and a surprisingly large number either did not total their score or make any effort to score. Several operators forwarded check logs and some of the top scorers prepared their logs with meticulous care. Generally, the numerous comments referred to a most enjoyable contest but quite a few criticised various aspects which cumulatively ask the question, is it a contest or a QSO party? This column is not the place to record those constructive criticisms and they wil be referred to the Executive. The VK7 people were very disappointed because repeater contacts were not allowed this time and copies of their comments will be forwarded to their Councillor.

Many operators recorded the name of the distant op and one entry, written with pride in the log received from VK4AL/8 shows VK3OW as "Dad".

It had to happen! Operators are allowed logkeepers. As an SWL submitted in the receiving section, a replica of a log entered in the transmitting, phone section, is there any good reason why an SWL should not have an operator?

DIVISIONAL SECTIONAL LEADERS' LOGS ARE SUBJECT TO FURTHER CHECKS

In the following detailed scores the first figures are the points scores and the second contacts made.

RECEIVING (OPEN)

VK2	J. Hilliard	449	141
VK3	E. Trebilcock	628	164
VK4	J. O'Sullivan	442	172
VK5	R. Witford	1564	597
	L. Collins	1137	312
	M. Spooner	1131	408
	M. Wall	922	425
	J. Macdonald	621	228
	M. Warrington	504	204
	R. Chester	361	129
	G. Edmeades	286	121
	D. Minchin	234	95
	R. Taylor	40	14
	I. Vickers Green	26	11
VK6	T. McGrath	1268	509
	G. Down	614	240
	R. McIntyre	461	168
	M. Clarke	459	187
VK7	P. Hall	913	387
	R. Everett	638	291

STATE SCORES

VK1

Phone

GB	1164	438	JG	129	40	TH	41	30
RA	553	229	ZAR	99	99	KW	30	30
ZT	467	227	RY	98	56	RH	13	8
TR	436	201	TJ	82	19	ML	11	11
LF	424	139	MF	76	57	JF	8	8
QJ	239	98	CR	61	57	PM	8	8
DV	213	90	AN	58	40	RD/4	758	260
BA	181	102	DS	53	53			
WI	138	112	ZMV	43	43			

Open

DA	1304	517	DC	722	318	ACA	94	19
AOP	1193	487	EP	635	278	YR	45	43
BC	1026	405	VP	436	175			
MS	929	376	AU	194	55			

VK2

Phone

ASD	1615	586	AWN	254	90	BXG	52	10
DO	1545	511	OW	249	62	AKV	47	9
XT	1530	519	BSC	242	97	AWX	42	42
BNS	1111	387	NV	227	76	AHH	41	21
AJY	949	317	BKE	191	69	BGG	40	12
BDT	889	307	BMX	190	83	AIM	39	8
ADA	782	306	AZY	173	69	ALV	38	15
AGF	754	235	BRU	159	56	ANL	36	12
ZA	731	238	AXJ	151	58	AGS	35	10
OH	706	231	BGA	150	53	JF	31	22
VU	611	185	AQ	127	51	YAO	29	29
BIP	575	210	ZCT	125	125	KQ	27	12
BDN	536	211	BSG	122	30	YCC	26	26
AJH	431	126	ASJ	117	40	QC	26	11
BML	344	118	ADL	114	34	ADR	26	5
ASH	343	120	SW	110	48	AXS	25	14
AGM	339	126	LW	103	21	BJK	23	14
AXL	336	100	YCK	99	99	HZ	21	10
LS	332	109	ZSG	84	84	ZZX	19	19
SB	307	100	ZVN	82	82	AEB	19	6
ABC	301	98	AFA	79	20	ZVJ	16	8
BPS	292	106	FJ	78	34	AGZ	13	5
CS	280	90	AAI	71	32	YBW	11	11
GV	277	83	CI	66	66	ZVY	10	10
AJL	275	97	AAC	63	12	YCA	8	8
RX	260	188	BHS	54	21			

Open

BO	1703	504	PN	619	144	BET	72	20
CAX	1333	401	AWQ	444	120	AXU	60	7
ATT	792	286	BCC	254	50	AHM	36	11
BLK	764	186	AJQ	232	55			

CW

CX	1408	248	GR	270	52	AXK	128	20
QL	1034	159	ANY	212	40	JY	118	26
HW	786	125	HQ	204	50	TR	90	25
BHO	710	145	BNL	200	43	IV	90	16
BQQ	652	120	KA	176	41	AMB	82	19
VN	608	112	SI	144	31	ZC	36	10
YB	458	79	VM	144	25	RJ	34	8

VK3

Phone

AFW	1127	500	BFN	313	154	WM	153	47
BDL	1119	553	KK	290	114	AJR	129	51
AYF	1066	525	ZD	287	123	ZBM	128	128
HT	1009	487	DC	280	121	BKW	122	121
AUQ	848	461	ASN	280	101	AJP	122	52
ADW	792	308	VQ	250	100	BJM	112	55
AXV	780	355	BMA	244	153	YHS	103	103
ARY	744	336	JK	244	117	BJB	95	42
SM	722	301	QG	235	93	ZBB	51	51
ANM	659	341	ZY	233	100	NV	51	25
GI	583	244	AGJ	227	104	ZRG	44	44
EF	556	250	PY	220	88	AXU	31	17
YQ	548	206	AKG	218	214	BAX	27	16
RV	517	217	HZ	214	110	ZZU	22	22
AGM	487	252	AVJ	207	122	ZSC	18	18
WP	469	220	IC	190	112	ARA	15	7
AFJ	397	176	ZLM	189	189	YFL	9	9
ABP	376	144	XF	188	80	AKT	3	8
SR	372	194	LV	183	63	BRB	7	7
QZ	353	154	UV	176	87	YDA	6	6
AAO	320	155	BAZ	173	67	ZPN	5	5

Open

AYL	985	481	QP	635	225	EZ	148	71
AQO	973	422	VF	266	160			
WW	947	443	PR	242	107			

CW

OP	714	180	JI	442	112	GK	100	24
CM	672	165	YK	320	70	TJ	92	24
FC	638	161	NK	266	68	ABR	82	22
ZO	584	142	RJ	264	74	AJB	74	24
ANU	582	160	ARK	242	73	BDH	18	7
MJ	506	116	AZT	222	55			
MR	446	118	ABS	152	50			

VK4

Phone

ZQ	2113	785	GI	217	65	ZDB	60	60
VU	1365	476	CY	216	93	ZUA	58	58
YS	1187	439	RO	200	66	ZGR	57	57
MM	871	349	LN	198	81	ZNH	57	57
OW	870	380	NO	186	45	FE	55	36
DO	870	310	CW	184	60	XN	50	12
FD	741	265	ZBV	181	181	KZ	49	18
CP	721	255	PU	178	50	NG	42	12
ZB	702	218	ZRF	173	173	ZTK	36	36
VV	688	243	ZLC	168	168	ZA	35	35
EZ	671	207	NB	162	32	UB	34	14
FU	663	256	YG	158	53	HW	33	10
KS	635	208	ZW	153	67	ZAF	29	29
LE	633	208	NY	138	52	ZRQ	28	28
QO	614	220	WIG	137	46	ZNI	26	26
PX	589	200	XZ	134	71	ZLD	25	25
MW	562	178	LR	134	40	TL	22	10
HB	434	149	BG	123	50	QW	19	10
IE	414	124	HZ	114	30	VS	22	6
PJ	400	117	ZML	113	112	ZFA	18	18
FX	377	119	AM	98	52	MU	18	10
GS	371	125	VL	96	36	SR	17	17
EM	349	122	ZZ	92	32	ZRI	17	17
FN	342	110	AQ	89	35	ZJM	15	15
WIM	309	108	NV	89	33	GT	14	8
IC	299	147	CR	82	34	UI	12	12
UC	289	121	ZDC	81	81	ZRG	11	11
GM	278	157	DV	75	31	ZDG	11	11
AJB	267	150	ZEZ	71	71	ZMD	9	9
DJ	250	93	ZJO	67	67	ZEA	8	8
CZ	247	73	LA	66	30	AL/8	292	100
NQ	237	84	EH	64	43			
UJ	217	101	AZ	61	22			

Open

II	2386	665	WL	676	122	PV	333	109
RH	1996	618	PS	655	217	XJ	266	91
UX	1909	603	LZ	643	236	IJ	209	92
HE	1787	504	NP	631	173	QH	61	29
LT	1291	363	VB	610	144	UG	60	23
UA	1005	287	UU	588	148	OS	48	15
DT	927	341	RF	518	173			
KI	765	167	AK	380	114			

CW

KX	962	159	HH	252	50	OK	104	20
UR	642	110	MY	220	38	CN	52	15
KU	492	87	CU	218	52			
FB	416	78	VA	138	30			

VK5

Phone

QX	1557	618	MF	555	184	WB	307	140
BW	1446	563	DI	542	167	SS	307	100
BI	1397	467	US	532	192	ZU	305	93
NC	1318	447	VX	511	149	IZ	304	119
FT	1233	442	LL	507	202	NY	301	137
NT	1226	513	KR	488	222	FR	294	102
EN	1186	438	VT	486	131	XI	278	123
PH	1041	394	TY	485	225	SU	269	100
CU	901	409	WR	483	181	CH	262	100
HI	896	360	NJ	477	174	AWI	259	122
GM	859	353	ZGZ	453	453	XU	246	78
WI	844	332	BQ	453	190	KX	239	173
LM	783	288	DV	445	273	AW	239	146
QV	767	279	DK	442	158	HN	235	120
LI	749	258	CY	433	150	NX	211	92
ZT	747	330	GL	427	304	ZQ	200	104
ZK	741	320	QY	422	138	PX	194	103
FD	735	259	QH	419	170	DF	184	58
LP	709	252	LX	406	150	BH	181	60
ST	700	268	UJ	388	140	ZCP	172	172
NN	692	236	AX	372	144	ZMF	172	172
ZZ	678	233	LN	357	119	TB	164	50
VB	634	227	ZDD	353	353	ZAC	161	161
NB	629	274	GV	347	115	FL	158	45
EF	629	243	LQ	342	104	PF	155	54
EX	611	231	UC	342	100	JD	153	69
MG	589	216	KG	317	129	AF	153	55
MM	561	229	GN	312	104	ZCR	150	150

BD	150	46	AS	68	42	PS	24	24
ZJV	148	148	ZNJ	67	67	WW	24	14
ZE	148	62	FA	63	41	CS	23	6
WN	141	79	JQ	63	30	ZBE	22	22
AH	140	41	EQ	63	21	ZKP	22	22
OZ	139	50	ZKS	60	60	ZMR	22	22
KH	138	65	QE	60	30	ZTK	20	20
TW	136	60	ZCV	56	56	VH	20	7
MT	131	92	GZ	56	21	ZTT	19	19
PO	131	38	ZDL	53	53	UL	19	12
JU	129	51	GX	52	52	WA	19	8
SD	128	37	TU	51	31	ZOO	18	18
CL	123	74	ME	51	30	ZL	17	10
HW	123	40	OO	50	25	WD	17	5
ZKJ	121	121	ON	50	18	ZAH	16	16
ZN	118	118	ZIB	49	49	RS	16	10
AL	116	30	GO	49	49	BA	16	9
BS	113	33	ZAR	48	48	ZY	16	8
ZAJ	110	110	ZBC	47	47	ES	16	5
KF	108	49	LW	47	24	UA	16	5
OC	108	38	IR	46	46	TX	15	15
ID	107	32	ZHF	45	45	ZSJ	15	15
SR	104	38	WK	45	22	ZZX	15	15
DE	104	30	QP	44	22	CX	14	14
ZS	102	63	LG	41	41	JN	14	14
GF	102	39	ZDT	41	41	ZFX	14	14
AC	102	30	PB	40	20	ZMC	14	14
JR	101	64	WM	39	12	ZHS	13	13
XV	99	46	ZJF	38	38	ZLH	13	13
PL	99	39	EB	37	31	ZLA	12	12
DP	97	32	IB	36	11	ZAQ	12	12
[illegible]W	96	29	OT	36	11	ZTX	12	12
[illegible]	96	29	ZKT	34	34	ZDI	10	10
KT	95	95	ZK	34	34	ZLO	10	10
LZ	95	22	JX	34	10	ZLT	10	10
PI	94	30	ZIM	32	32	LK	9	6
HH	91	33	KW	32	10	ZNN	9	9
TO	88	37	ZJM	31	31	AN	8	8
GW	88	30	UN	31	9	ZFM	8	8
RI	88	29	ZEF	30	30	ZIS	8	8
ZR	88	27	ZJA	30	30	BT	8	6
PV	83	36	ZLK	30	30	PG	7	7
LC	83	25	ZPP	30	30	CJ	6	6
IM	82	31	ZAW	29	29	MK	6	6
HD	80	20	ZAT	28	28	ML	6	6
YS	79	30	RW	28	13	OP	6	6
ZNJ	76	76	MB	27	9	ZMK	6	6
RY	76	21	ZHR	26	26	JF	5	5
QG	75	38	DQ	26	9	RL	5	5
ZDG	74	74	ZBM	25	25	CV/4	31	31
PQ	74	32	ZPS	25	25			
JE	69	30	RP	25	14			

Open

NO	1875	555	QI	570	135	RK	178	63
RG	1337	383	RC	485	145	MA	15	8
BO	878	252	RR	270	105			
XX	656	266	HM	267	76			

CW

OR	950	170	KU	400	62	DS	58	10
[illegible]	900	175	ZX	312	60	KY	56	12
[illegible]	898	172	AU	296	49	GK	44	8
QR	758	143	LD	190	40	LB	30	10
MD	676	127	RX	172	25	JG	26	8
FM	598	117	DW	160	41	RH	26	8
IF	486	100	KQ	156	30	PE	26	7
QB	454	88	XD	156	28	VC	20	6
KJ	450	95	DL	110	27	UE	18	5
NM	438	97	TL	104	20			
FY	424	85	HO	84	25			

VK6
Phone

KG	1763	700	EB	276	111	WI	121	106
ID	1235	500	GR	259	95	SH	112	112
AO	1076	412	DT	255	105	ZGZ	108	108
KY	1048	494	AN	234	152	KC	106	34
WC	980	405	GL	226	90	CO	103	45
DA	952	452	DZ	220	86	TU	98	37
KW	932	364	ZIW	208	208	CW	87	49
VP	778	284	VK	180	82	TZ	75	72
KS	739	287	ZHJ	176	176	KJ	72	35
JK	668	253	FW	172	62	MM	68	68
PH	666	256	FH	164	67	PD	68	68
NM	568	213	DY	161	84	LT	66	21
BD	550	203	HE	161	52	CN	59	37
VW	495	202	WL	154	59	ML	51	15
LG	466	100	HU	142	141	HT	45	19
KB	465	254	BY	138	120	ZCN	40	40
JY	342	152	MF	125	53	XX	38	10
ZKY	34	34	CD	22	9	JO	8	8
LE	29	11	AWI	19	19	RC/8	27	9
QR	25	12	NE	19	19			
NA	25	6	ZDF	10	10			

Open

CT	2073	722	NK	587	167	RL	230	75
RU	1294	455	ZZ	537	191	HX	212	61
MA	1196	426	EJ	401	153	CR	106	32
ZE	928	215	QJ	289	127			
FI	713	249	EG	282	110			

CW

WT	1106	218	GA	88	20			
JF	616	132	HD	24	8			

VK7
Phone

BR	876	442	BJ	251	75	SF	68	20
KJ	650	256	EB	236	117	FB	58	27
NR	570	203	ZIF	194	194	ZJG	51	51
MX	567	248	OA	149	70	ZDA	36	36
LH	547	243	BM	127	50	ZIE	29	29
KH	544	200	CF	112	57	ZAD	26	26
MZ	505	138	BE	91	54	ZWX	24	24
AX	483	248	ZBY	84	84	ZLD	23	23
GW	451	110	ZGG	76	76	TT	9	9
OH	387	164	LY	74	29	ZMF	6	6
JU	286	144	DW	73	32			

Open

ZZ	368	133	AL	245	58			
HE	340	91	PF	133	59			

CW

CH	872	171	RY	300	84	RL	12	6
RO	712	169	RK	62	21			

VK8
Phone

FB	1065	363	CEB	248	91	BB	33	13
AX	428	171	CEG	179	58			
AZ	291	93	RZ	144	71			

Open

KK	1298	526	JS	346	153	AJ	168	71

CW

HA	366	66						

VK0
Phone

MX	1038	178	DM	273	48			

P29
Phone

DJ	1479	440	DM	577	207	CA	316	102

ZL
Phone

1BKL	946	475	2AUS	726	341	3SZ	1119	326
AGO	179	75	GJ	644	320			

Open

1ACL	798	390	3ABC	812	214			
2KX	450	194	4CP	1920	422			

CW

4BE	944	103	1BJH	242	67			

ROSS HULL MEMORIAL VHF-UHF CONTEST 1974/75

The rules were set out in last months issue of AR. It is in the best interests of Amateur Radio to be as active as possible in these parts of the spectrum so join in if you can, please.

JOHN MOYLE NATIONAL FIELD DAY

It is only 3 months off so how about trying out your car's alternator on the lawn mower motor. Incidentally, David VK3AKG made 214 contacts during the RD contest using 2 watts F3 on 52 and 146 MHz.

CONTEST CALENDAR

Nov 10	Czechoslovakian
Nov 16/17	ARRL Phone Sweepstakes
Nov 23/24	CQ WW DX CW
Nov 30	10 metre ground wave test
Dec 7/8	Tops CW
Dec 7	Ross Hull Memorial
Dec 14/15	ARRL 10 metre

Czechoslovakian Contest

MN GMT Sun Nov 10 to 2400 GMT
Phone and CW all bands

Categories: Single op, both single and all band. Multi op all band only.

Scoring: One point per qso, 3 points if with Czech stn. Multiply total by sum of ITU zones worked on each band. Certs to top scorers in each category in each country. Logs to Central Radio Club, Box 69, Praha 1, Czechoslovakia by Dec 31st. ●

PROJECT AUSTRALIS

The following equator crossings are for Oscar 6 "on" orbits over Australia for November 1974. The satellite is "on" Monday night, Thursday night, Saturday night and Sunday morning local time.

Times given are U.C.T. (Z) but days are local. Figures have been corrected to latest NASA predictions.

Orbit No.	Time (Z)	Equator Cross (°W)	Orbit No.	Time (Z)	Equator Cross (°W)
Sat. 2nd			**Sat. 16th**		
9362	0728.71	160.6	9538	0847.72	180.3
9363	0923.71	189.3	9539	1042.72	209.1
9364	1118.7	218.1	9540	1237.71	237.8
9365	1313.69	246.8	**Sun. 17th**		
Sun. 3rd			9543	1822.7	324
9368	1858.68	333.1	9544	2017.69	352.8
9369	2053.67	1.8	9545	2212.68	21.5
9370	2248.67	30.6	9546	0007.68	50.3
Mon. 4th			**Mon. 18th**		
9387	0723.57	159.3	9563	0842.58	179
9388	0918.56	188	9564	1037.58	207.8
9389	1113.56	216.8	9565	1282.57	236.5
9390	1308.55	245.5	**Thurs. 21st**		
Thurs. 7th			9600	0737.38	162.7
9425	0813.36	171.7	9601	0932.37	191.5
9426	1008.35	200.5	9602	1127.36	220.2
9427	1203.35	229.2	9603	1322.36	249
9428	1358.34	258	**Sat. 23rd**		
Sat. 9th			9625	0732.24	161.4
9450	0808.22	170.4	9626	0927.23	190.2
9451	1003.21	199.2	9627	1122.22	218.9
9452	1158.21	227.9	9628	1317.22	247.7
9453	1353.2	256.7	**Sun. 24th**		
Sun. 10th			9631	1902.2	333.9
9455	1743.19	314.2	9632	2057.2	2.7
9456	1938.18	342.9	9633	2252.19	31.4
9457	2133.18	11.7	**Mon. 25th**		
9458	2328.17	40.4	9650	0727.1	160.1
Mon. 11th			9651	0922.09	188.9
9475	0803.08	169.1	9652	1117.08	217.6
9476	0958.07	197.9	9653	1312.08	246.4
9477	1153.07	226.6	**Thurs. 28th**		
9478	1348.06	255.4	9688	0816.88	172.6
Thurs. 14th			9689	1011.88	201.3
9513	0852.86	181.6	9690	1206.87	230.1
9514	1047.86	210.3	**Sat. 30th**		
9515	1242.85	239.1	9713	0811.74	171.3
			9714	1006.74	200
			9715	1201.73	228.8

NOTES—These orbits are those that can be seen by the Australian East Coast Command Station (VK3ZDH, Melbourne) and can therefore be commanded 'on'. Additional Western orbits can be seen by VK5 & 6 readers. You are welcome to use these orbits if they are "on" on the correct nights and Sunday morning. To obtain azimuth, elevation and time settings for any QTH in Australia, use the standard orbit predictions for the nearest capital city as printed in AR. It is hoped to provide these predictions and similar ones for Oscar 7 on a monthly basis in AR. ●

VHF UHF
an expanding world
with Eric Jamieson VK5LP

Forreston, S.A. 5235
Times: GMT

NOVEMBER 1974
AMATEUR BAND BEACONS

VK0	VK0RSA, Macquarie Island	52.160
	VK0MA, Mawson	53.100
	VK0GR, Casey	53.200
VK1	VK1RTA, Canberra	144.475
VK2	VK2WI, Sydney	52.450
	VK2WI, Sydney x	144.101
VK3	VK3RTG, Vermont	144.700
VK4	VK4RTL, Townsville	52.600
	VK4WI/1, Mt. Mowbullan	144.400
VK5	VK5VF, Mt. Lofty	53.000
	VK5VF, Mt. Lofty	144.800
VK6	VK6VF, Perth	52.301
	VK6RTU, Kalgoorlie	52.350
	VK6RTT, Carnarvon	52.900
	VK6RTW, Albany	144.500
	VK6VF, Perth	145.000
VK7	VK7RTX, Devonport	144.900
VK8	VK8VF, Darwin	52.200
P29	P29GA, Lae, Niugini	52.150
JA	JA1IGY, Tokyo, Japan	52.500
3D	3D3AA, Suva, Fiji	52.500
ZL1	ZL1VHF, Auckland	145.100
	ZL1VHW, Waikato	145.150
ZL2	ZL2VHF, Wellington	145.200
	ZL2VHP, Palmerston North	145.250
ZL3	ZL3VHF, Christchurch	145.300
ZL4	ZL4VHF, Dunedin	145.400

x denotes change of frequency.

Reading the "Victorian VHFer" I note John VK2BHO reports VK2WI in Sydney now being on 144.101 MHz. This frequency has been noted in the listing and I hope it will prove correct. It would certainly be appreciated if changes to frequencies, call signs or locations could be advised to me by those responsible for the beacons as it would help to keep lists accurate. The fact that I do care about accuracy of listings should be evident from the fact that I followed up a set of very incorrect listings in the 1974 NZART Call Book, mention of which was made last month. So, beacon officers, please keep me informed.

Band operational news being rather scarce this month, I feel it is just as or more important to give you a couple of reprints this month to help you with your digestion. They are very relevant, and very important, I think you should read on. The first comes from the QRT edition of "The Victorian VHFer" being the editorial by Mike Goode, VK3BDL . . .

"THE GOLDEN AGE OF THE BUTTON PUSHER". "Button pushing" idealises in many respects the current "state of the art". With large numbers of commercial carphones about, the ready availability of specifically designed amateur equipment, and the use of well designed and well located repeaters, the amateur's life has become a very easy one. One wonders if the modern ham can possibly become as enthused as the older members of the fraternity who originally produced their own equipment.

"Admittedly, in some respects, todays carphones are similar to the 522 sets of yesteryear, however, one fears many amateurs may never wish to operate anything more than what is really a glorified telephone (a function which it satisfies well), as contacts are so easy to obtain. Additionally, the repeater systems are often abused by people pushing sub-standard signals through the device, despite the consequent poor reports from other operators.

"Amateurs were originally those who developed and experimented wtih new radio communication techniques. In today's society, such is nigh impossible because of the commercial exploitation of wireless that followed the initial development. However, amateurs are still the exponents of propagation effects and there are many keen experimentalists in this field, e.g. moonbounce, and meteor scatter. Amateurs are also providing mobile emergency communications through bodies such as WICEN. In this sense, we are a unique group in the community as we understand how communication "works" and thus we can exploit our system far more fully than other groups of communicators.

"We can only hope in the current shortage of radio spectrum that we can continue to justify our existence and preserve our frequencies for the amateurs of the future.

"Have you considered trying a little harder and producing a signal which will allow some degree of experimentation and not just sufficient to key the local repeater?"

A few comments from me. Everything Mike has said is only too true. The amount of VHF activity at present on both 6 and 2 metres, other than FM, is appalling. One needs only to look at the VHF notes in the quite large number of publications currently being produced in Australia to realise there is just about nothing to pass on for about 9 months of the year. VK5 must surely take the lemon for the lowest degree of activity of anywhere in Australia, particularly on 2 metres, and I would be fairly safe in betting that it is not because of equipment building! One needs only to look at the small display of equipment brought to our WIA members equipment night each year in August to realise practically nothing VHF-wise is being constructed on a worthwhile scale. And what about such gatherings as the VHF Convention on the June holiday weekend in Mt. Gambier, which was held for the 10th time this year. Despite scores of VHF amateurs attending, only a very very small display of home constructed equipment is tabled. Yet, if one looks outside on such occasions, dozens of cars have transmitting antennas mounted thereon, and connected to commercial gear.

So I think Mike is right on the ball when he pleads for some signals in areas of the bands which allow for some experimentation. And lest anybody, in VK5 particularly, likes to start pointing any fingers in my direction let the facts be put right. I have struggled to keep this column going for quite a few years now with not much help from the amateur fraternity as a whole, with a few exceptions. Particularly has it been difficult during the past two years due to homework and exams for the colour TV course I have been doing, and will be doing until the end of this year. Three times in succession I have won one of the section prizes for home constructed gear (all VHF orientated) at successive WIA Annual members equipment nights, for equipment constructed between school lessons, a little bit of band listening, and still keeping the home fires burning. At present I am constructing a 432 MHz transverter, and a transmitter for 576 MHz. So lay that pen down!

The other editorial is contained in the September 1974 issue of the Geelong Amateur Radio Club Newsletter, headed "TV or NOT TV" above the name of Daryl R. St. John, VK3AQR.

"The Australian TV system is possibly the most unorthodox in the world. In 1956 when TV was first started, we had a selection of 10 TV channels (1 to 10). A few years later, as the channel situation was generally found to create problems and proved unsatisfactory, a 13 channel system was substituted. Besides adding three new channels, 0, 5A and 11, we had to alter Ch. 1, 4, 5 and a slight shift to Ch. 10. Now with FM broadcasting around the corner it appears that within the next year or two we will have to vacate Ch. 3, 4 and 5 if we are to use the international FM band (88-108 MHz).

"This would mean another shift in TV frequencies, also that Ch. 5A which is adjacent to our very popular 2 metre band, may be used more commonly for TV. As most, or I should say all amateurs know, the six metre band creates all sorts of problems to channel 0 and vice-versa. Recently, over the VK3WI broadcast, the facts regarding Ch. 5A have been released. To the amateur, it appears that we may be 'pushed' out of our popular 2 metre band, similarly to the 6 metre situation.

"It is time for us to lobby together, and discuss the 2 metre band problem at clubs, over the air, and to our local member of Parilament. It is ridiculous for a "young country" like ours to have two changes, from the original TV system in 18 years . . . and what is next? UHF? All local TV manufacturers have been advised to provide switching for UHF converters for future installation . . . A further TV frequency change?

"The best TV system proposed to date, appears to be a VHF Channel 6 upwards, for country areas because of the range and propagation conditions and UHF for capital and main cities, because of lack of interference from power lines, vehicles, co-channels etc. Aerials should be cheaper too with UHF, due to smaller size etc.

"It is up to us now, to look into the problem. Look at the troubles associated with the shift in FM channels on 2 metres. What happens if we have to possibly vacate the entire band? Many 2 metre FM repeaters are located on the site of TV transmitters. Receiver problems, and additional expense to repeater groups will undoubtedly occur if 5A was introduced. So far here in Victoria, we have not been allocated a Ch. 5A, but in other states, especially Queensland and NSW, Channel 5A licences are pending.

"I believe that in Townsville, the channel 3 ABC station will be changed to 5A (2 metres), and a local repeater to serve a suburb on Ch. 1 (6 metres). In other words, possibly spelling no 6 or 2 metre activity from the Townsville area!

"Look out; keep up the SSB on 52, and 144 MHz. Use FM and repeaters correctly, and give some thought".

If that doesn't prick the consciences of many amateurs I don't know what will. It was a great tragedy when we lost the lower two MHz of 6 metres, placing us 2 MHz further apart from the majority of the rest of the world, in particular, with our neighbours most likely to come within range at certain times. Many worthwhile contacts over the years have no doubt been lost because of the 2 MHz difference. Similarly, if we get pushed up to the last 2 MHz of 146 to 148, we will be isolated with a vengeance. A 2 metre yagi cut for 144 operation is an almost worthless device 2 MHz away, particularly higher, so the chap on the other end on 144 in New Zealand, as an example, is never likely to hear you, nor you him. And has it ever occurred to those who have never operated on the lower end of 2 metres that if we lost all the 2 metre band, you would really have to start doing some construction work and produce 432 MHz gear (if we still had that band!) because not much commercial equipment is around suitable for conversion to 432 or 440 MHz.

Finally, before the subject is changed, it surprises me to note the number of amateurs originally considered dyed-in-the-wool VHF types who, when the full licence is obtained, simply take up appliance operation on the HF bands. There is room on our bands for all kinds of operators, but don't let any of us become too narrow in our operating circle.

PORTABLE OPERATION

Despite my requests for information of proposed portable operation during the Christmas-New Year break, nothing has reached my desk, so presumably no one is going out except me. Ah! Well. I guess I can take up kite flying around 0700 instead of working other portable stations during those periods of coastal ducting and inversions. However, not quite all is lost, as Kerry VK5SU did write to me with some information on proposed operation from Ceduna this coming DX season. Kerry advises the VHF beams are being rebuilt or overhauled. On 6 metres he will run CW/SSB 40 watts PEP output, AM/FM 20 watts output. All modes to a 4 el. yagi at 54 feet. 2 metres: CW/SSB 20 watts PEP output, AM also available, all to 11 el. yagi at 60 feet. He mentions that even with this low power he was successful in working to Sydney and Canberra last year. FM: 10 watts output to a 10 element vertically polarized yagi at 57 feet, and will have available: Repeaters: New 1, 2, 3, 4. Old Ch. B. New Channel 50. He will be looking for contacts through the Adelaide and Albany repeaters, and further afield if possible. FM will also be monitoring either Ch. 50 of Ch. B when home, and amateurs passing through Ceduna would be welcome. Thanks Kerry, for going to the trouble of writing. Would be pleased to hear from you again soon.

THE TOWNSVILLE SCENE

A letter from Ron VK4ZLC, Publicity Officer of the Townsville Amateur Radio Club, indicates the repeater is progressing slowly. They are hoping to be allocated Ch. 1. The Club has been busy holding raffles, dinner dances etc. to raise funds for the repeater. It is hoped to site the repeater on Mt. Stuart, alongside the TV stations. Mt. Stuart is situated about 5 miles west of the town with a

ANTENNA PARTS, KITS

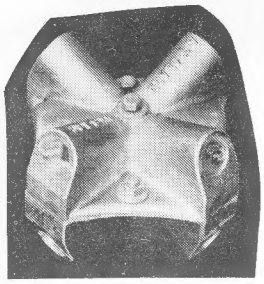

QUAD HUB: $23.00 plus P/P $2.00

QUAD KIT: $120.00. Freight forward.
4 only @ $90

Consisting of: Hub: 12 ft. solid F/G. Spreaders: Aluminium Extenders. Ferrules. Adaptors: 350 ft. 0.064 Hard Drawn Copper wire.
Nylon line and insulators.

MOBILE ANTENNA PARTS:

6 ft. solid F/G blanks, ½-¼ inch	**$6.00**
Solid brass butt fitting, ½ in. whit. or 3/8 in. UNF thread	**$2.00**
Brass tip chuck	**50c**

S. T. CLARK
P.O. BOX 45, ROSANNA
VIC., 3084 Ph.: 45-3002

For Reliable Connections

OTL

RESIN CORE SOLDERS

O. T. LEMPRIERE & CO. LIMITED

Head Office: 31-41 Bowden St., Alexandria, N.S.W., 2015 and at Melbourne, Brisbane, Adelaide, Perth, Newcastle

FOR YOUR—

YAESU MUSEN

AMATEUR RADIO EQUIPMENT
in
PAPUA-NEW GUINEA

YAESU

Contact the Sole Territory Agents—

SIDE BAND SERVICE PTY. LTD.

P.O. Box 795, Port Moresby Phones 53557, 55511

good lookout both north and south and only slight reduction in coverage to the west. Present proposals are for a 25 watts solid state repeater, possibly more power later.

About 35 amateurs are now capable of radiating on Ch. 50 in the Townsville area, and the majority also capable of Ch. 40. On 6 metres local nets are on 53.032 Sunday mornings, while Ross VK4RO at Ayr (50 miles south) and Mario VK4ZMS (70 miles north) have regular skeds on 52.010 SSB.

It is hoped there will be some signals available on 144 MHz for the coming DX season, as this may be the last opportunity for a while (due to propagation) or forever (if we lose 144-148) of working the northern VK4 boys from the southern areas.

HE VICTORIAN VHFer

The "QRT" edition of the above reached my desk recently. Very sorry indeed to see it go, it has contained a wealth of information within its pages in its rather short life. Reasons given are lack of suitable articles, rising printing and paper costs, and postal charges. All valid points. Originally the brainchild of Bob VK3AOT, that great exponent of the art of VHF, and later carried on by Ian VK3YAY, and supported by all too few at the working end, I am sure all will regret the demise of such a worthwhile contribution to the VHF scene. May I voice my lone thanks to those associated with its production, and mention I still have on file every copy of the "VHFer". And they will be kept for the future. A job well done, boys.

Similarly, looks like some production difficulties for the Sydney based publication "6UP". Issues have been few and far between of late, again I expect for the same reasons in Victoria. All too few willing to help with production, costs high etc., changing home demands of already overworked personnel and so on. However, hope you can keep going for the time being Roger, VK2ZTB, your style is different, and you don't mind being controversial, certainly no yes-man!

While on the subject of publications, once again I thank all those clubs and publicity officers who continue to send me copies of their newsletter with such regularity. Although I don't write back personally, there just isn't time at present, believe me, their receipt is appreciated, and I feel it would be a sorry day when they ceased to arrive.

That's probably enough for this month, looks like a few grouches aired etc. but all in a good cause. I could add more, but won't. Closing with the thought for the month: "We have too many people who live without working, and we have altogether too many who work without living". And did you hear about the transistor-radio manufacturer — he's so outstandingly successful he's looking for smaller premises!

The Voice in the Hills. ●

Awards Column

with BRIAN AUSTIN VK5CA
P.O. Box 7A, Crafers, SA, 5152.

ITU "DIPLOME DES 100" AWARD

Secretary General M. Mili of the International Telecommunication Union has announced the establishment of an award for radio amateurs and shortwave listeners in recognition of their efforts to promote international goodwill through amateur radio. Known as the "Diplome des 100", the award will be given to any amateur who submits proof of contact with stations in 100 different member-countries of the ITU, or to any SWL who proves reception of amateur stations in same. Only contacts made on or after January 1, 1967, or after a country's ratification or accession to the Montreux convention, whichever is later, may be counted.

Only stations using frequencies, emission modes, and call signs which are in accordance with the ITU Radio Regulations may be logged or contacted for purposes of this award. There will be no endorsements for special conditions, but stickers will be given for each ten additional Administrations contacted or logged.

Administration of this award has been delegated to the International Amateur Radio Club (4U1ITU), Geneva. Requests for further details should not be sent to Geneva but should be mailed, with a self-addressed stamped envelope, to the IARC Award Manager, L. M. Rundlett, K4ZA, 206 East Amhurst St., Sterling Park, VA 22170. The application fee is 10 IRCs or $2.

DIPLOME 35 (AHC)

The Section 35 (Ille et Vilaine) of REF, France, issues this certificate to licensed amateurs and SWLs all over the world.

1. Licensed amateurs need contact with five different stations located in the department 35, Ille et Vilaine, France.
2. SWLs need send reports to 5 stations as above.

The Award is issued separately for (a) HF bands and (b) VHF bands. Contacts may be made using any mode of transmission.

An exchange of RS(T) and QTH is obligatory.

Contacts with mobile-portable stations located in department 35 are valid provided their exact location is indicated on the QSL cards.

QSL cards are not required to be sumitted.

Licensed amateurs apply with a copy of the station log, signed by the applicant. SWLs apply by enclosing a copy of their SWL licence and the QSL cards to the 5 stations of department 35.

Costs 8 IRCs.

These rules are valid as from January 1969.

Address for the application:

Jean-Yves Rioult, F5JU
11 Square de Provence
35 - Rennes, France.

DLYL CERTIFICATE

A certificate is now available for those persons showing proof of contact with YLs in the GERMAN FEDERAL REPUBLIC. The requirements are: DX stations outside EUROPE work 10 women amateur radio operators with a licence of the German Federal Republic. A QSL of a YL working at a club station (DK0 or DL0) counts extra if this QSL and the personal QSL of the YL show different dates. All bands, and all modes of emission are acceptable. This award is available to SWLs as well as amateur radio operators. Stickers are awarded for each additional 10 contacts.

Send GCR-list together with 10 IRCs, or equivalent stamps of your own country, to the custodian: Ursula Burger, 12 Furberger Str., 563 Remscheid, Germany/Europe.

This award will be sent by airmail. ●

Hamads

FOR SALE

AWA MR10C, complete with Ch. B, $55 O.N.O. **Habross HF AM Transceiver,** xtal locked, suitable for 160 metres, $10. Complete **Microwave** duplex system, comprising of two units, fully tunable and plenty of spare parts, $110. VK3ZQP, 94 Dendy St., Middle Brighton, Vic. 3186. Ph. (03) 92 5667 A.H.

Geloso G222TR AM-CW 80-10 metre Tx with handbook, $75. 20 foot dural self supporting portable **Mast** in canvas bag, $8. Power and audio transformers, tuning dials, power supplies, valves, HT chokes, blowers, amplifiers, tuning capacitors, and other oddment parts for best reasonable offer. VK3UG, QTHR. Ph. (03) 231 2028 after 7 p.m.

HAM-M Rotator, as new, $120. **Mast** 60 ft. — 5 section, butt on type by Hills, $50. **Teleprinter** Creed 7C, good working order, $30. **Power Supply** — 500V/500mA, stabilized. Dural **Tubing,** various diameters and lengths. **Pye Mark 3,** converted to 6 m. **3API** C.R.O. tube. VK6NE, QTHR.

Yaesu Station, consisting of FTDX-400 with 45 C.F.M. fan attached, and spare 6KD6s, FTDX 400 VFO, FTV 650 and SP20, matching speaker, $550, but open to any reasonable offer or will separate units to sell. VK6NE, QTHR. Ph. (092) 46 3232.

Halicrafters SX 117 Rx — HT 44 Tx — P.S. and speaker. 80-10. SSB-CW-AM. VOX-PTT. 120 PEP. Good condition. All new valves and new spare 6DQ5 Finals, $320 or offer. L. A. Lawson, 77 Hill Ave., Burleigh Heads, 4220. Ph. (075) 35 2639 day, 35 2640 night.

Trio TR2E 144-148 MHz AM Transceiver, 240V/12V P.S. Inbuilt, separate VFOs for Tx/Rx, also xtal locked, 1 xtal for Tx 144.25 MHz, Mic, handbook, good condition, $150 ONO. VK7ZDA, 65 Brougham St., West Launceston, Tas. 7250. Ph. (003) 31 6643.

Drake TR4 Transceiver with AC P.S. Excellent condition with mike, speaker. Spare set Final Tubes. VK2AGO, QTHR. Ph. (02) 43 2427.

Galaxy 5 Transceiver SSB 80, 40, 20, 15 28-30, complete with P.S. spkr., mike. manual and full circuit, very good condition, $350 ONO. VK3FO, QTHR. Ph. (054) 75 2245, AH (054) 2378.

Pye 9 MHz xtal filter with carrier xtal, $25. **Collins** PTO VFO, 75A series, $20. **Pye** Reporter 53.032 MHz AM Tx CR, $15. **Contact** 53032 MHz TXCR, $10. **TCA** FM 100 W base, $40. 100W Zero Bias 807s **Modulator,** $40. **PSU** 866s, 800V @ 800 mA, $40. Several **Command Receivers,** $15 each. 3.5-4 MHz **Receiver,** $10. **Tx,** 3.5-30 MHz CW, AM, 150W, built-in PSU (still used on CW) "mini mitter" VFO H/bands, $65. **WIA** 6 & 2 metre converters with xtal for H/band, $30. **2** as new **4C x 250B Valves** and 1 only secondhand one, $30 the lot. **1 pair** 27.125 hand-held **Sharp Transceivers,** 1 watt, 2 channel, $60. **RCA** 14 in. portable TV, $70. A. Greening, VK3WU, 57 Glen St., Glenroy. Ph. AH (03) 306 2039.

Pye Ranger FM Transceiver, converted to 2m with channel B xtals, FET preamp. Ex VK3TR, in working condition, $50. H. Trotter, 133 Dalton Rd., Thomastown, Vic. 3074.

Transmitters: 2 of AT14 100W AM, 2 x 813 PA, 2 x 809 mods, 2-20 MHz; 2 of AMT300 300W AM, 1.6-10 MHz, 2 x QY3/125 PA, 2 x QY3/125 mods, all recently operating RFDS, suitable linears or bits; also transformer 240-7 KVCT 0.9A, and HV chokes 0.6A. Offers to VK4OH, 20 Alfred St., Charleville, Q. 4470.

Auction Sale Night. Moorabbin & District Radio Club. To be held on Friday 1st November 1974, at the Moorabbin baseball clubrooms, Summit Ave., Moorabbin, at 8 p.m. Quantity, new and slightly used VHF and UHF FM solid state mobiles and portables. Enquiries to Treasurer: John Emery, VK3YCD. Ph. (03) 783 6003 AH.

AWA MRT25A with xtals for 52.525 MHz, $100. **AWA MRT25A** with xtals for Ch. A, B 1 & 4, $120. **Pye MkIIIA** with xtal for 53.866 MHz, $12. Complete set of RF & IF coils for AR88D, what offers? VK2AXJ, QTHR. Ph. (02) 798 9021.

FT200/FP100 combination with xtals for 28.0 and 27.0 installed. Smart black facia, 12 months old and as new, $270. VK2BBD. Ph. (02) 939 7215.

ESTATE LATE VK2ASU. 40 ft. 3 leg gal. steel tower complete with prop, pitch motor, motor mounting plate with Selsyn motor attached, 20 ft. 2" drive shaft gal. pipe, top bearing, side ladder, platform mounts, 8 ft. x 2" heavy aluminium twin boom, duralumin tubing. This tower will support any beam. $165 ONO, VK2AFN, QTHR. Ph. (02) 76 9525.

SWAN 350 SSB Transceiver with DC and AC PS in excellent condition with manual VOX xtal calibrator, $320. VK2ABU, QTHR. Ph. (02) 212 1623, A.H.; or 32 5916, Bus.

FT101B, new in carton, used 3 times only, $470. P. Gibson (P29LL), Flat 104, 150 Mill Point, South Perth.

Pye 2Mx Carphone, conv. to SS chs A, B, C 1 and 4 (old). Boards to 25W. Plus untried 50W board. Needs attention, $120. **AWA MR10C** SS PSU, all cables etc. ch 4 (old) and B, $45. **Kingsley AR-7** HF Rx, all coil boxes with PSU, $65. **No. 10 Calibrator,** $10. VK3YGY, Box 41, P.O. Castlemaine, 3450.

KEN KP202 2 metre transceiver, $120. Ch. B, 1, 4, 144.48, 144.6. **10 watt** amp to suit above, $20. VK2ZSC, QTHR. Ph. (02) 85-5324.

Channel 1 xtals for MR3 etc., $10.00. Wanted xtals for Channel 2. VK3TG, 2 Willow Crt., Kyabram, 3620. Ph. (058) 52 1636.

Collins 75S3 Rx mint condition, unmodified, little used, $550 ONO, also antennas TH3 and 18AVQ, VK3ARD, QTHR. Ph. (03) 277 3954 A.H.

WANTED

14 AVQ in good condition. Part exchange 4 band, 3 element "mini beam" in good condition. VK2BBD. Ph. (02) 939 7215.

Amateur band or **General coverage Rx,** write R. Jacob, 429 Kothoff St., Lavington, N.S.W.

FT200/FP200 combination. Price and particulars to R. Norman, VK5SW, QTHR. All replies answered.

GDO with coverage up to 2 metres. VK3ZTA, QTHR.

Bandspanner, Webster, mobile all band HF antenna. VK6QR, 16 Narrung Way, Nollamara, 6061. Ph. (092) 49 3492 AH.

18 AVT vertical or similar. Price etc. to: VK3YGY, Box 41, P.O. Castlemaine, 3450.

20 Years Ago

with Ron Fisher VK3OM

NOVEMBER 1954

"Should We Hold a Region III Congress". The Institute was fast becoming aware of the need for an international approach to the problems facing the Amateur Service. Even in 1954 intruders in the exclusive amateur bands were common. The battle continues today. The question of reporting modulation quality was one that came up from time to time. With the RST system firmly established by this time, an RSM system was proposed by the RSGB. The 'M' was to donate modulation quality on a 1 to 5 basis with 'unintelligible modulation' at the lower end and 'good modulation, not exceeding 100 per cent' at the other.

Ray Jones VK3RJ in his Federal QSL Bureau Notes reports on one of the most interesting cards he had ever handled. The card from KF3AB located on Fletcher Ice Island in the Arctic, confirmed a QSO with Chas VK1AC on Macquarie Island. In a letter accompanying the QSL, the writer Lloyd Hull claims that the QSO is a record as no other pole to pole contacts had previously been made.

Technical articles in November 1954 Amateur Radio included: The New Look in Frequency Modulation, part two — the receiver, by John Miller VK2ANF; Part two of the Complete Amateur by Tom Athey VK4UT described a small audio oscillator plus a newcomers introduction to aerials; and Jack Duncan VK3VZ described the 'New Overtone Oscillator Circuit'. This was later known as the Robert Dollar circuit.

A 'stop press' item announces that South Australia has won the 1954 RD contest with Western Australia a close second. ●

Silent Keys

ERN HODGKINS — VK2EH
FRED ORVAD — VK2AHX

The month of July 1974 brought sorrow to the Central Coast Radio Club.

First, the passing of Ern VK2EH and in the same week, Fred VK2AHX.

Ern was one of the old-timers and was licensed in 1934 but held one of the early Experimenters Licences prior to that. He spent the greater part of his life in the Technical Education Department and resided on the Central Coast for many years.

Wherever Ern went he was active in the Amateur Radio Field and for a number of years operated the morse Tape Service and regularly took his place on the nightly morse practice session on 80 metres.

In this capacity he assisted many present Hams to obtain their licences and gained great pleasure from doing so.

He was a past president of the Central Coast Club and held office of some kind the whole time he was a member. Ern became ill a couple of years ago and had to relinquish a lot of Ham activities. He passed away after an operation in Gosford Hospital early in July.

Fred Orvad VK2AHX was another of the old brigade, first being licensed in 1937. He was a PMG telegraphist in the early days and later was attached to the electrical branch of the department.

Since moving to the Central Coast, Fred was a stalwart member of the Radio Club and always a willing worker.

Although mainly a DX man, Fred was well known on the local scene on VHF since retiring. He was a friend to everyone and his shack door was always open to visitors in true Ham style.

The Central Coast Radio Club will be much the worse for both these members' passing and extend sincere sympathy to their loved ones.

Their calls will no longer be heard — but, they will be remembered.

Dick Maitland, VK2BBK

LEW MACDONALD, VK2WU, late of 29 Milson Street, Charlestown, passed away on 31st August 1974 aged 65 years.

Up to the time of his death, he was an active member of the Hunter Branch of the NSW Division.

Lew obtained his Amateur Licence on 13th May 1930 and a Broadcast ticket in October 1936. He also obtained a 1st Class Commercial operator's certificate in March 1937.

Lew will be remembered by many amateurs for his assistance and instruction in helping others to obtain their amateur licence.

To his family and friends, we extend our deepest sympathy.

Ray Leben, Hon. Secretary,
Hunter Branch

ALEX STEWART VK2AXF

The many friends of Alex Stewart were sad to hear of his passing away in hospital on 2nd September. Alex first entered Ham radio in the late 1920s in Temora, and later Tumut, as VK2XF. He later spent many years in the radio section of Qantas but relinquished his call sign when on a long tour of duty overseas. Ill health caused his retirement and he came back on the air as VK2AXF. Alex always kept two receivers and two transceivers tuned to parts of the 7 mc band, and a short call generally "raised" him if not already in a net. Many Hams attended his funeral and he will be sadly missed by many who, like myself, have known him many years.

VK2BC

For More Efficient...

TRANSMISSION and RECEPTION install a

STOLLE Antenna-Rotator

Now with powerful thrust bearing for greater strength and load capacity.

An unrivalled aerial rotating system for TV or Amateur Radio antennas. With a **STOLLE Automatic Aerial Rotator,** accurate and positive antenna positioning in any direction, is right at your fingertips. This allows you to beam your antenna (for transmission or reception) by simply turning the control knob to the desired position, with a full 360° coverage. A STOLLE rotator is rugged enough to handle the weight and wind load requirements of ham antennas up to the size of a normal 3-element 20-metre beam. It can operate for sustained periods of time without thermal overload . . . and with absolute synchronization. Positive disc brake on motor prevents "overshoot".
A five-core cable is available to connect rotor to control unit.

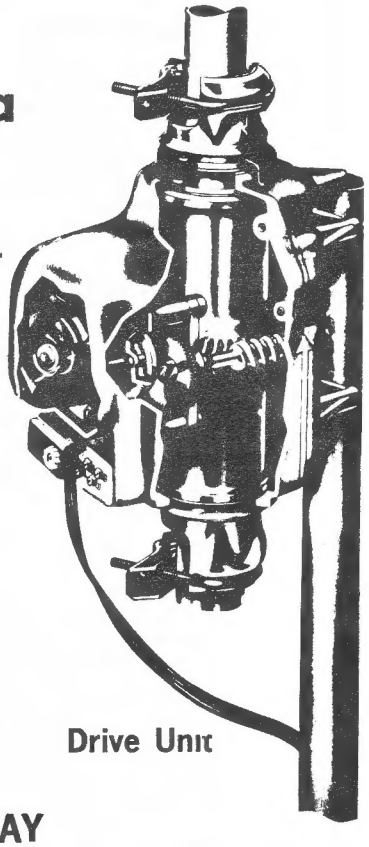

R.H. Cunningham *Pty. Ltd.*

VIC.: 493-499 Victoria St., West Melbourne 3003. 329-9633. **N.S.W.:** 4-8 Waters Road, Neutral Bay 2089. 909-2388. **W.A.:** 65 Balcombe Way, Balga 6061. 49-4919. **QLD.:** L. E. Boughen & Co., 30 Grimes St., Auchenflower 4066. 70-8097. **S.A.:** Arthur H. Hall Pty. Limited, 1-3 The Parade West, Kent Town 5067. 42-4506. **TELEX:** Melbourne 31447 — Sydney 21707 — Brisbane 41500.

Control Unit

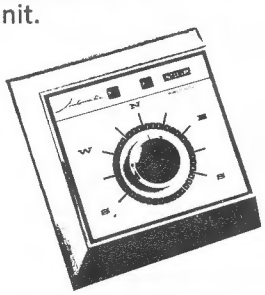

Drive Unit

Install a STOLLE Rotator TODAY

ICOM

IC 22 FM 10W 144 MHz

PRICE: $198 INC. TAX
AND 3 CHANNELS
EXTRA CHANNELS $7.80/PR

Features

- ☐ Switchable Power 1 or 10 Watts
- ☐ 22 Channel Capability
- ☐ Adjustable Deviation
- ☐ Solid State T/R Relay
- ☐ Built-in Protection for P.A.
- ☐ DC Voltages Filtered and Regulated
- ☐ Complete with Mounting Bracket
- ☐ Microphone, Cables etc.
- ☐ Size 58 x 156 x 205 mm

ALL AVAILABLE EX STOCK with all accessories

Maico Electronics

MOUNT STREET, HEIDELBERG, VICTORIA 3084 AUSTRALIA. TEL. 45 2615

3881.

THE NEW KENWOOD TRIO TS-520 — $500

Specifications:

1. **Built-in AC power supply**
2. **Built-in 12 volt DC power supply**
3. Built-in VOX with adjustable delay and anti VOX
4. 1 kHz dial readout
5. Ultra stable FET linear VFO
6. Built-in noise blanker
7. Built-in RIT circuit and RIT indicator light
8. 8 pole crystal filter
9. Built-in 25 kHz crystal oscillator
10. Provisions for optional CW filter
11. Break-in CW with sidetone
12. Completely solid state except final section. Compact, low current, reliable with heater switch for mobile receive-only operation
13. Built-in cooling fan
14. Accessory external VFO & accessory external speaker
15. Built-in speaker
16. Modern styling & functional design. Modular construction.
17. Amplified ALC
18. TUNE position increases tube life
19. Maximum TVI protection
20. Built-in fixed channel operation (4 channels) with indicator light
21. Provisions for use with a VHF transverter
22. Full metering
23. Selectable SSB
24. Selectable AGC operation for different modes
25. VFO indicator light
26. Built-in selectable ALC action for speech processing
27. Carrying handle
28. Rugged 6146 type final tubes
29. Internal cross-channel operation
30. Push button WWV reception

YAESU MUSEN

FT-101-B, supplies easing, almost ex-stock	**$525**
FT-DX-401 with built-in AC supply, 8 weeks	**$495**
YC 355 D digital frequency counter, still only	**$250**
Spectronics DD-1 counter for 101/401	**$150**
FT DX 400/560 noise blankers,	**$20**

HY-GAIN ANTENNA

14 AVQ 10-40 M vertical 19 feet tall no guys	**$50**
18 AVT/WB 10-80 M vertical 23 feet tall no guys	**$70**
TH3JR 10-15-20 M junior 3 el. Yagi	**$110**
TH3Mk3 10-15-20 M senior 3 el. Yagi soon	**$150**
DB 10-15 10-15 M 3 el. Yagi ideal for use over 204 BA	**$110**
Magnetic base mobile whip 108 MHz up with 18' RG-58U cable and coax plug	**$18**

CDR ANTENNA ROTATORS

AR-20, smallest model only for 2m beams	**$35**
AR-22R for stacked 2 & 6m or small HF beams	**$45**
Ham II with re-designed control box, now with separate brake-control	**$135**
All for 230 V AC with indicator-control units.	

BARLOW-WADLEY RECEIVERS

Model XCR-30 Mk II 500 kHz to 31 MHz continuous coverage, crystal controlled reception of AM/USB/LSB/CW	**$250**

NOISE BRIDGES

Omega TE 01 up to 100MHz	**$25**

POWER OUTPUT METERS

Galaxy RF-550A with 6 pos. coax switch	**$75**

BALUNS

New Japanese model, 52 or 75 Ohm 1 KW PEP	**$10**

MOBILE ANTENNA

Mark helicals 6 feet long	HW 40, 40 M.	**$18**
	HW 20, 20 M.	**$16**
	HW 80, 80 M.	**$18**
	high power KW 40, 40 M.	**$25**
	tri-band helical HW 3, 10/15/20 M.	**$25**

CUSH CRAFT ANTENNA PRODUCTS

DGPA 27-50 MHz ground plane	**$25**
AR-2 144 MHz Ringo	**$20**
LAC-2 lightning arrestors	**$6**

CRYSTAL FILTERS

9 MHz similar to the FT 200 ones, with carrier xtal	**$30**

POWER SUPPLIES

240 AC to 12V DC 3 to 3.5 Amps. regulated	**$30**

LOW PASS TVI FILTERS

Cut-off frequency 35 MHz 6 section filter	**$18**

MIDLAND

PTT dynamic microphone	**$10**

27 MHz NOVICE LICENSEE & CITIZEN-BAND EQUIPMENT

MIDLAND 5 W AM 23-channel transceivers complete with PTT mike all channel crystals 12 V DC op. **$95**
PONY 5 W CB-78 identical to Midland 5 W transceivers, **$95;** CB-74 5 W AM with 27.880 xtals, fishermen **$80**
SIDEBAND BRAND NC-310 one Watt hand-held transceivers **$50;** SE-501 SSB/AM 15 W PEP SSB 23-channel transceivers, complete with PTT mike etc. 12V DC **$175**

144 MHz TWO METRE EQUIPMENT

MULTI-7 solid state 24 channel FM 12V DC transceivers, 1 and 10W output, receiver with FET rf stage and mixer, equipped with crystals for TEN Australian channels Nos. 40, 42, 44, 46, 48, 50, 54, 56, 58, 60, to be used either transceive or combinations repeaters and ANTI-repeaters, complete with PTT microphone, mounting bracket **$225**

KEN PRODUCTS KP-202 hand-held 2 W output transceivers, now with 4 Australian channels, 40 & 50 plus a choice of 2 repeaters 42/54, 44/56, 46/58, 48/60 **$150;** KCP-2 battery charger and 10 NICAD batteries **$35** Leather case for KP-202 **$5;** Extra crystals for KP-202, two crystals per channel **$8**

KLM ELECTRONICS solid state 12V DC 2 M. amplifier, 12 Watt output, automatic antenna change-over when driven, ideal for mobile use with the KEN KP-202 **$50.**

BELCOM LINER 2 SSB 20 Watt PEP SSB 12V DC solid state transceivers **$250.**

YAGI ANTENNAS 9 element 10 ft boom with gamma-match coax feed **$30.**

All prices quoted above will be subject to increases due to the 12% dollar devaluation, and expected price increases overseas, particularly for HY-GAIN antennas. Trading conditions are net, cash with orders, no terms nor credit available, no COD and no exceptions, Government & Public Company orders included. Add enough for freight, postage and insurance, all-risk insurance 50 cents per $100.— value, minimum insurance charge $0.50. Excess paid for freight and insurance will be refunded promptly . . . MARY & ARIE BLES, proprietors.

SIDEBAND ELECTRONICS SALES and ENGINEERING

P.O. BOX 23, SPRINGWOOD, N.S.W. Post Code 2777

TELEPHONE, **DURING BUSINESS HOURS ONLY!** STD 047 511-394